SUSPENSION AND AXLE

TROUBLESHOOTING

Problem	Possible cause	Remedy	Page 2WD	Page 4WD
Wanders/pulls	Tires worn or improperly inflated Alignment incorrect Wheel bearing adjusted too tight Front or rear suspension parts loose or broken Steering linkage loose or worn Steering gear out of adjustment or broken	Inflate tires to proper pressure or replace tires Check front alignment Adjust wheel bearing Tighten or replace suspension parts Tighten or replace steering linkage Adjust or repair steering gear	SA–3 SA–13 SA–17, 153	SA–6 SA–39 SA–111, 153
Bottoming	Vehicle overloaded Shock absorber worn out Springs weak	Check loading Replace shock absorber Replace spring	SA–22, 153 SA–20, 153	SA–116, 153 SA–114, 153
Sways/pitches	Tires improperly inflated Stabilizer bar bent or broken Shock absorber worn out	Inflate tires to proper pressure Inspect stabilizer bar Replace shock absorber	SA–28, 157 SA–22, 153	SA–122 SA–1 16, 153
Front wheel shimmy	Tires worn or improperly inflated Wheels out of balance Shimmy damper worn out Shock absorber worn out Alignment incorrect Wheel bearings worn or improperly adjusted Ball joints or bushings worn Steering linkage loose or worn Steering gear out of adjustment or broken	Replace tire or inflate tires to proper pressure Balance wheels Replace steering damper Replace shock absorber Check front alignment Replace or adjust wheel bearings Inspect ball joints and bushings Tighten or replace steering linkage Adjust or repair steering gear	SA–22, 153 SA–3 SA–12 SA–18	SA–116, 153 SA–6 SA–36 SA–112
Abnormal tire wear	Tires improperly inflated Shock absorbers worn out Alignment incorrect Suspension parts worn	Inflate tires to proper pressure Replace shock absorber Check toe–in Replace suspension parts	SA–22, 153 SA–5 SA–17, 153	SA–116, 153 SA–9 SA–111, 153
Oil leak from differen–tial	Oil level too high or wrong grade Oil seal worn or damaged Companion flange loose or dam–aged	Drain and replace oil Replace oil seal Tighten or replace flange	SA–136 SA–135 SA–149	SA–57, 136 SA–54, 135 SA–56, 149
Noises in axle	Oil level low or wrong grade Excessive backlash between pinion and ring or side gear Ring, pinion or side gears worn or chipped Pinion shaft bearing worn Axle shaft bearing worn Differential bearing loose or worn	Drain and replace oil Check backlash Inspect gears Replace bearing Replace bearing Tighten or replace bearings	SA–136 SA–137 SA–137 SA–137 SA–124 SA–137	SA–57, 136 SA–68, 85 137 SA–66, 82, 137 SA–66, 82, 137 SA–124 SA–66, 82, 137

WHEEL ALIGNMENT
4WD

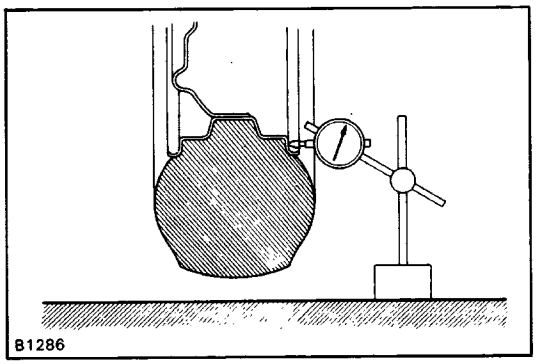

1. MAKE FOLLOWING CHECKS AND CORRECT ANY PROBLEMS

(a) Check the tires for wear and proper inflation.
Cold tire inflation pressure: See page A–25

(b) Check the wheel runout.
Lateral runout: 1.2 mm (0.047 in.) or less

(c) Check the front wheel bearings for looseness.

(d) Check the front suspension for looseness.

(e) Check the steering linkage for looseness.

(f) Check that the front absorbers work properly by us–ing the standard bounce test.

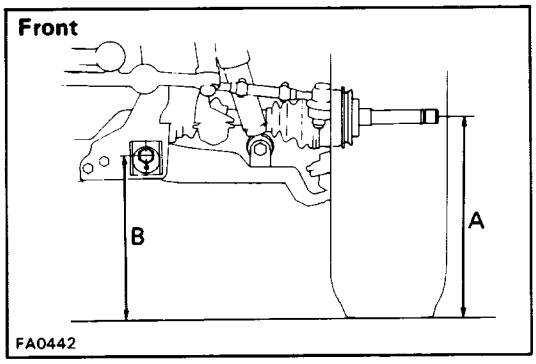

2. ADJUST VEHICLE HEIGHT

Adjust the vehicle height to the standard vehicle height for wheel alignment inspection.

HINT: With non–loaded vehicles, there is a difference in the vehicle height according to the model.

Although the wheel alignment standard value changes according to the vehicle height, by setting the vehicle height to the standard height the standard alignment value becomes the same for all models.

Front: A – B = 58.5 mm (2.303 in.)

A: Height at center of tip of drive shaft

B: Height at center of tip of front side adjusting cam bolt

Rear: C – D = 61.0 mm (2.402 in.)

C: Height of center of rear leaf spring front bush 1

D: Height of center of rear axle shaft

HINT: For the vehicle height of non–loaded vehicles for each model and the alignment standard values, refer to page A–25.

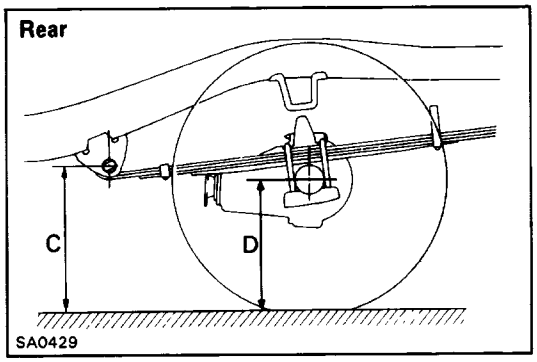

3. INSTALL WHEEL ALIGNMENT EQUIPMENT

Follow the specific instructions of the equipment manu–facturer.

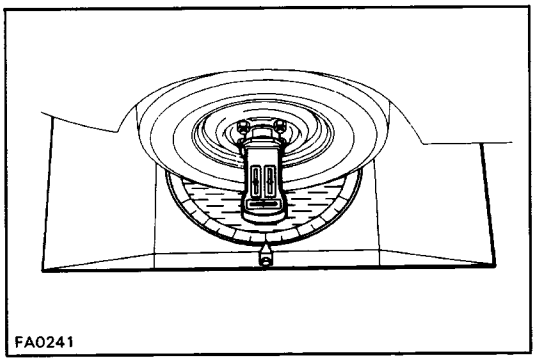

4. ADJUST CAMBER, STEERING AXIS INCLINATION AND CASTER

Camber, Steering axis inclination, Caster: See page A–25, 26

If the steering axis inclination is not as specified after camber and caster have been correctly adjusted, re-check the steering knuckle and front wheel for bending or looseness.

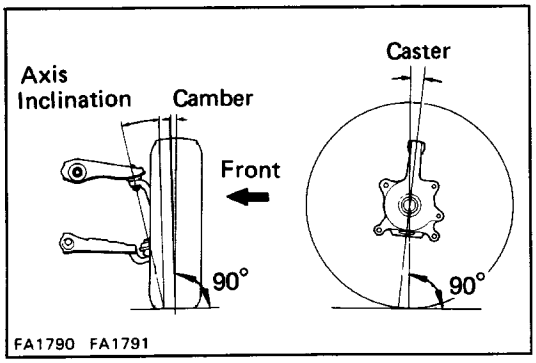

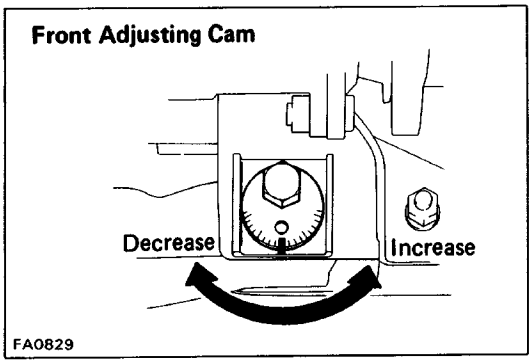

If camber and/or caster are not within specification, adjust by front and/or rear adjusting cams.
(See Adjustment Chart)

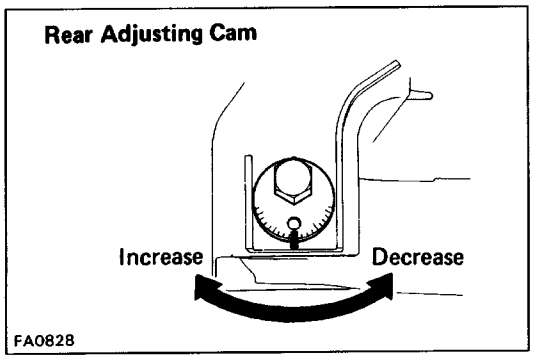

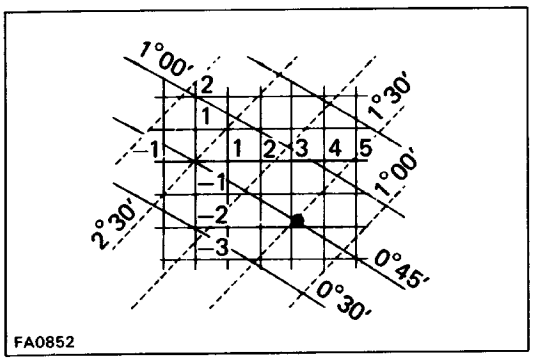

How to Read the Chart
(Alignment measured with vehicle height set to standard
height for wheel alignment inspection)

(a) Mark on the adjustment chart the alignment values measured with the vehicle at standard height.
Example: Camber 0°45'
Caster 1 ° 30'

(b) To calculate the amounts by which the front and/or rear cams are to be adjusted, read from the adjustment chart the distance from the center of the chart to the mark you have made, as shown in the illustration.
Example: Front cam –1.8
Rear cam + 3.1

(c) Torque the front and/or rear cam nuts.
Torque: 196 N–m (2,000 kgf–cm, 145 ft–lbf)

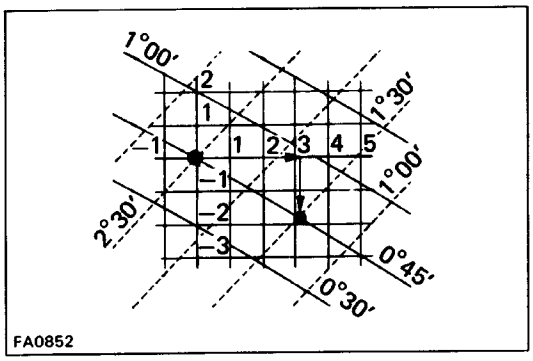

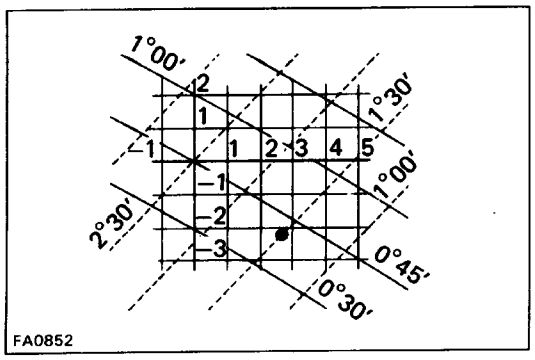

How to Read the Chart
(Wheel alignment measured at vehicle height of non–loaded vehicle)

(a) Find the wheel alignment standard value applicable for the particular model in non–loaded condition.
(See page A–33)

(b) Mark the selected standard value on the adjustment chart.
Example: Camber 0°40'
Caster 1 ° 30'

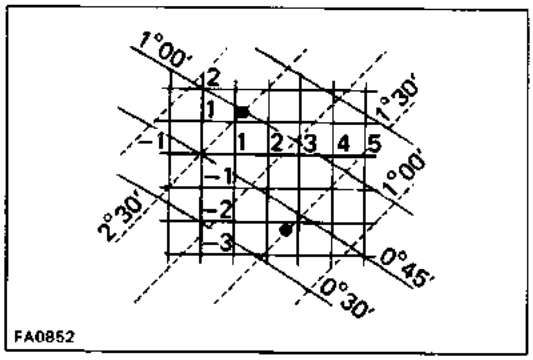

(c) Mark on the adjustment chart the alignment values measured at the non–loaded vehicle height.
Example: Camber 1°00'
Caster 2°30'

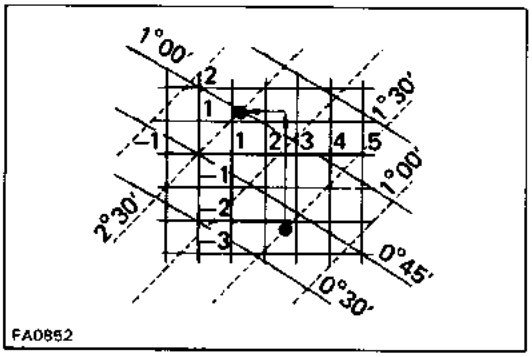

(d) As shown in the illustration, read the distance from the standard value to the measured value, and adjust the front and/or rear adjusting cams accordingly.
Example: Front cam + 3.4
Rear cam –1.6

(e) Torque the front and/or rear cam nuts.
Torque: 196 N–m (2,000 kgf–cm, 145 ft–lbf)

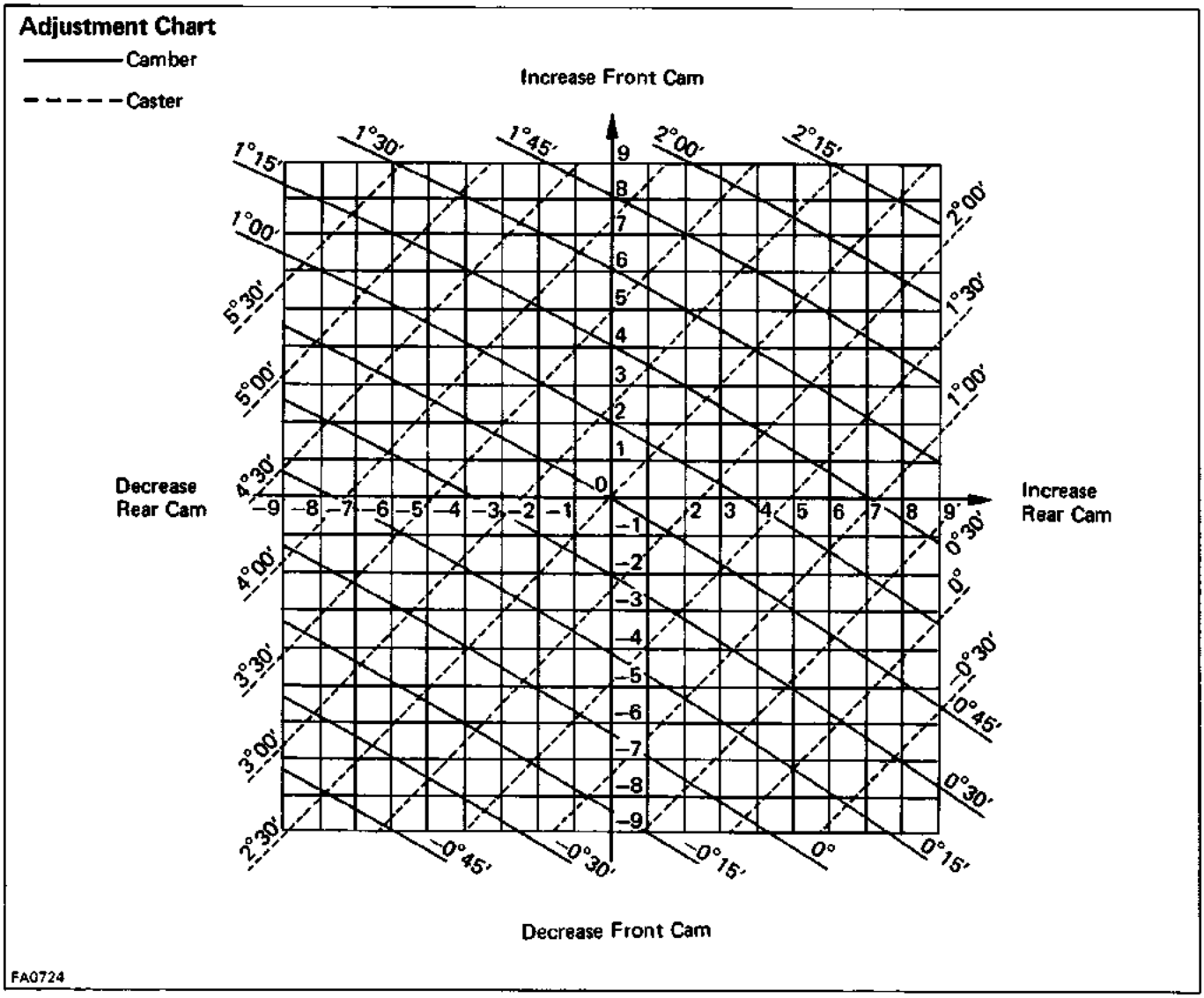

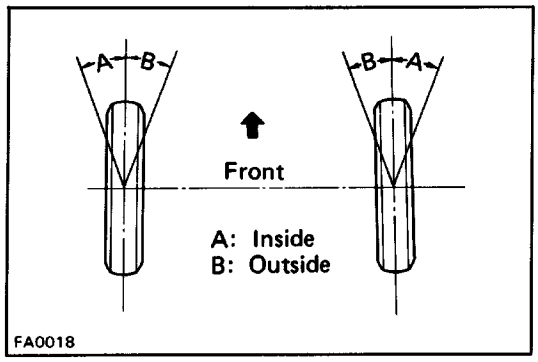

5. ADJUST WHEEL ANGLE

Remove the caps of the knuckle stopper bolts and check the steering angles.

Wheel angle		
Max.	Inside wheel	32°00' +1° –2°
	Outside wheel	31°
at 200 (outside wheel)	Inside wheel	21 ° 10'

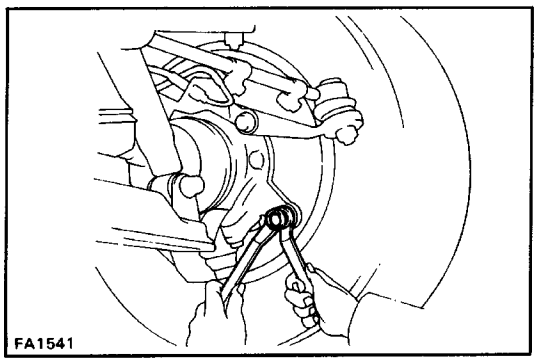

HINT: When the steering wheel is fully turned, make sure that the wheel is not touching the body or brake flexible hose.

If maximum steering angles differ from standard value, adjust the wheel angle with the knuckle stopper bolts.

Torque: 47 N–m (480 kgf–cm, 35 ft–lbf)

If the wheel angle still cannot be adjusted within limits, inspect and replace damaged or worn steering parts.

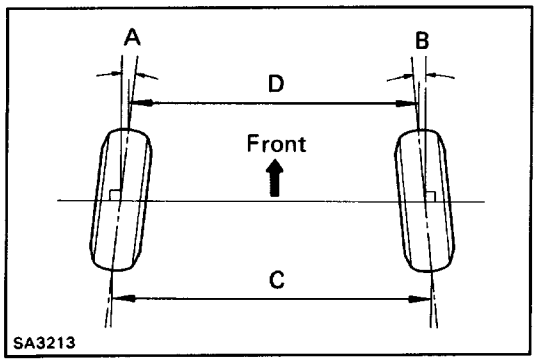

6. INSPECT TOE–IN

Toe–in: See page A–26

If toe–in is not within specification adjust by the tie rod end.

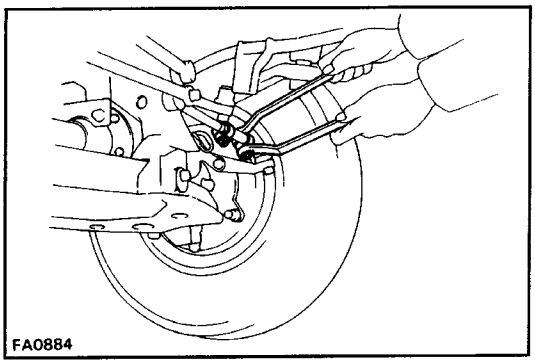

7. ADJUST TOE–IN

(a) Loosen the clamp bolts and nuts.

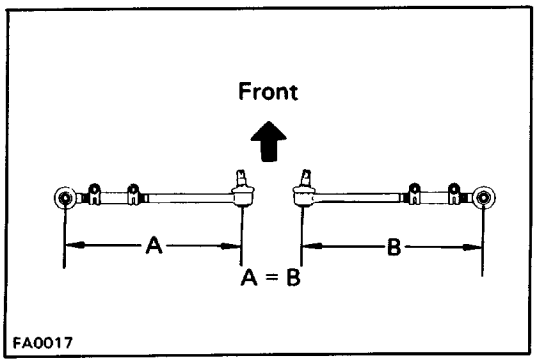

(b) Adjust toe–in by turning the left and right tie rod tubes an equal amount.

Toe–in: See page A–26

(c) Insure that the lengths of the left and right tie rods are equal.

NOTICE: Check that the steering wheel is straightened.

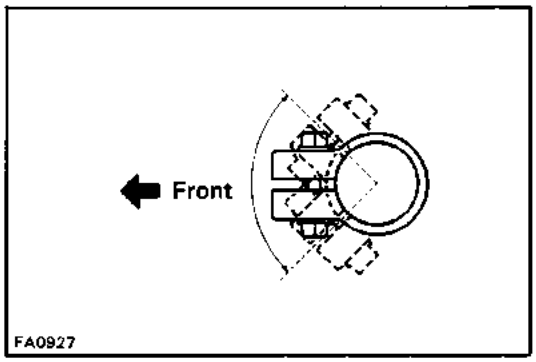

(d) Torque the tie rod.

Torque: 22 N–m (225 kgf–cm, 16 ft–lbf)

HINT: Face the clamp bolt toward the front of the vehicle.

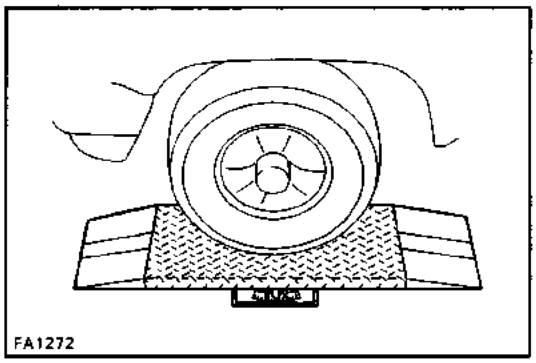

8. INSPECT SIDE SLIP (REFERENCE ONLY)

Side slip: 3.0 mm/m (0.118 in./3.3 ft) or less

WHEEL ALIGNMENT
2WD

1. MAKE FOLLOWING CHECKS AND CORRECT ANY PROBLEMS

(a) Check the tires for wear and proper inflation.
Cold tire inflation pressure: See page A–23

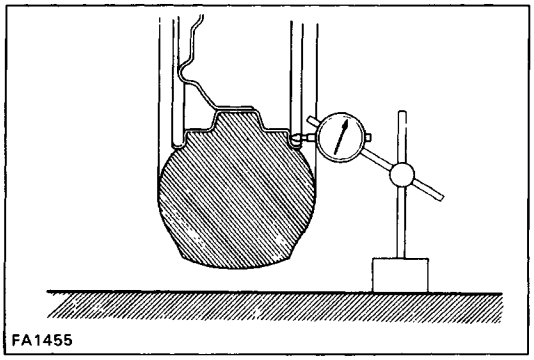
FA1455

(b) Check the wheel runout.
Lateral runout: 1.2 mm (0.047 in.) or less
(c) Check the front wheel bearings for looseness.
(d) Check the front suspension for looseness.
(e) Check the steering linkage for looseness.
(f) Use the standard bounce test to check that the front absorbers work properly.

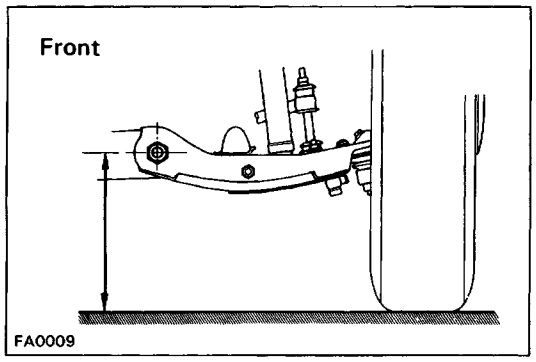

FA0009

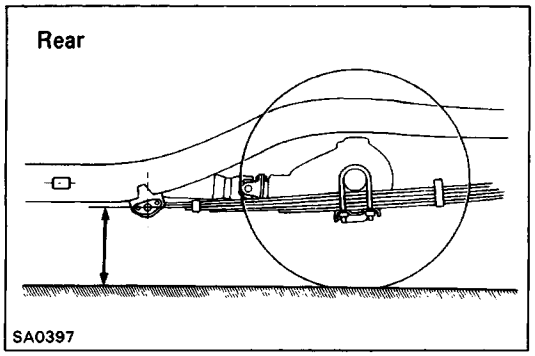

SA0397

2. MEASURE CHASSIS GROUND CLEARANCE

Chassis ground clearance: See page A–23

If the clearance of the vehicle is not standard, try to adjust it by pushing down on the body or by lifting the body. If still not correct, check for bad springs or suspension parts.

HINT: Before inspecting wheel alignment, adjust chassis ground clearance to specification.

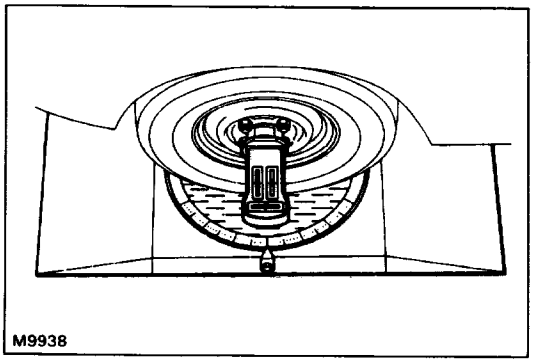

3. INSTALL WHEEL ALIGNMENT EQUIPMENT

Follow the specific instructions of the equipment manu–facturer.

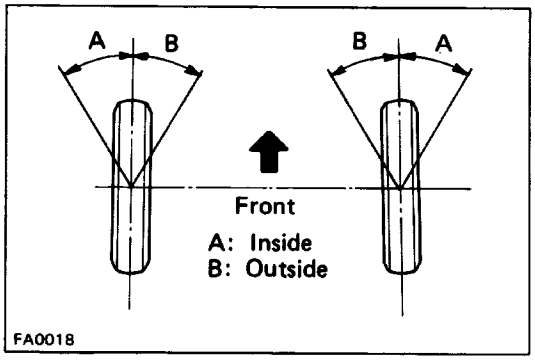

4. ADJUST WHEEL ANGLE

Remove the caps of the knuckle stopper bolts and check the steering angles.

Steering angles: See page A–24

HINT: When the steering wheel is fully turned, make sure that the wheel is not touching the body or brake flexible hose.

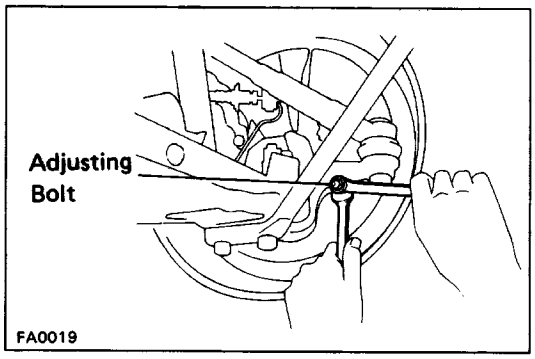

If maximum steering angles differ from standard val-ue, adjust the wheel angle with the knuckle stopper bolts.

Torque: 34 N–m (350 kgf–cm, 25 ft–lbf)

If the wheel angle still cannot be adjusted within limits, inspect and replace damaged or worn steering parts.

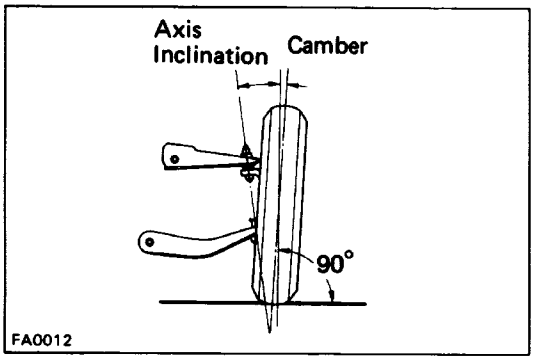

5. ADJUST CAMBER, STEERING AXIS INCLINATION AND CASTER

Specifications: See page A–23, 24

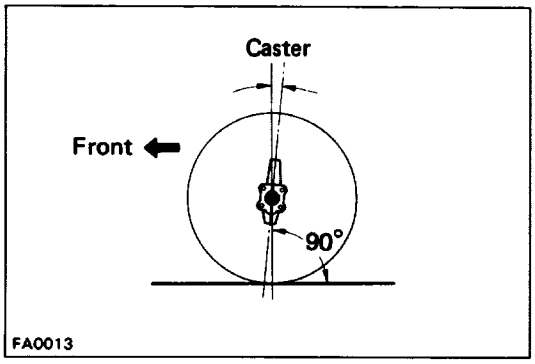

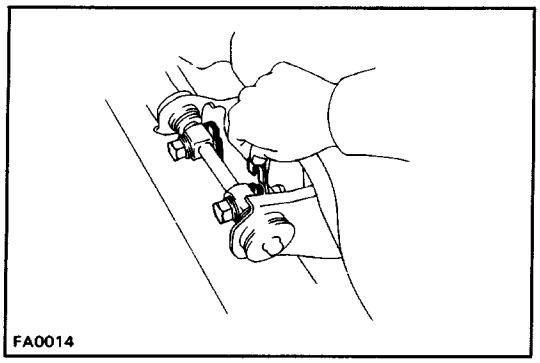

If camber caster is not within specification, adjust by adding or removing shims on the upper arm.
Shim thickness mm (in.)

Thickness	
4.0	(0.157)
1.6	(0.063)
1.2	(0.047)

If the steering axis inclination is not as specified after camber and caster have been correctly adjusted, recheck the steering knuckle and front wheel for bending or loose–ness.

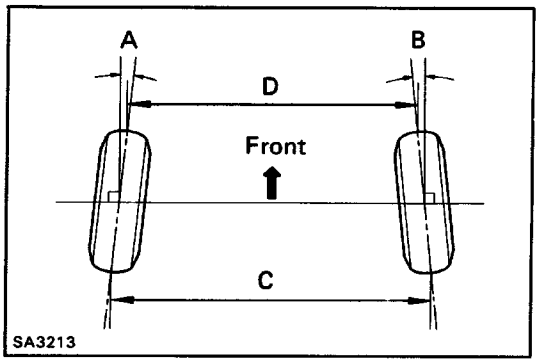

6. INSPECT TOE–IN

Toe–in: See page A–23

If toe–in is not within specification adjust by the tie rod end.

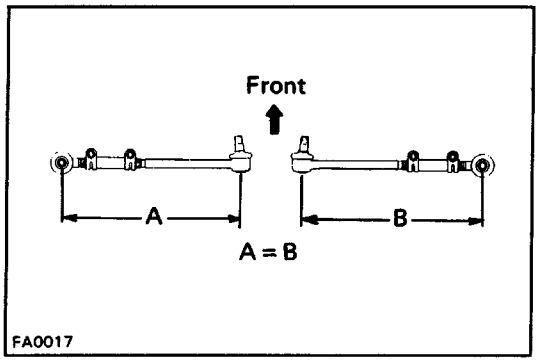

7. ADJUST TOE–IN

(a) Loosen the clamp bolts.

(b) Adjust toe–in by turning the left and right tie rod tubes an equal amount.

Toe–in: See page A–23

HINT: Make sure that the tie rods are the same length.

Left–right error: 3.0 mm (0.118 in.) or less

(g) Tighten the clamp bolts and torque them.

Torque: 25 N–m (260 kgf–cm, 19 ft–lbf)

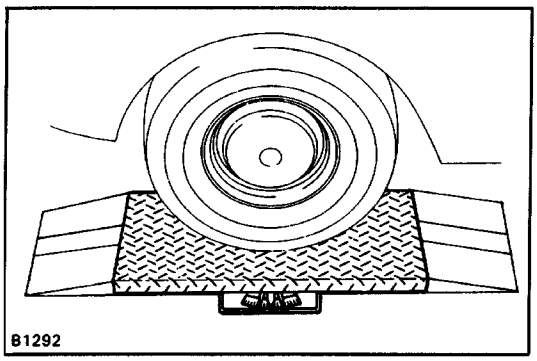

8. INSPECT SIDE SLIP (REFERENCE ONLY)

Side slip: 3.0 mm/m (0.118 in. I3.3 ft) or less

FRONT AXLE HUB AND STEERING KNUCKLE COMPONENTS

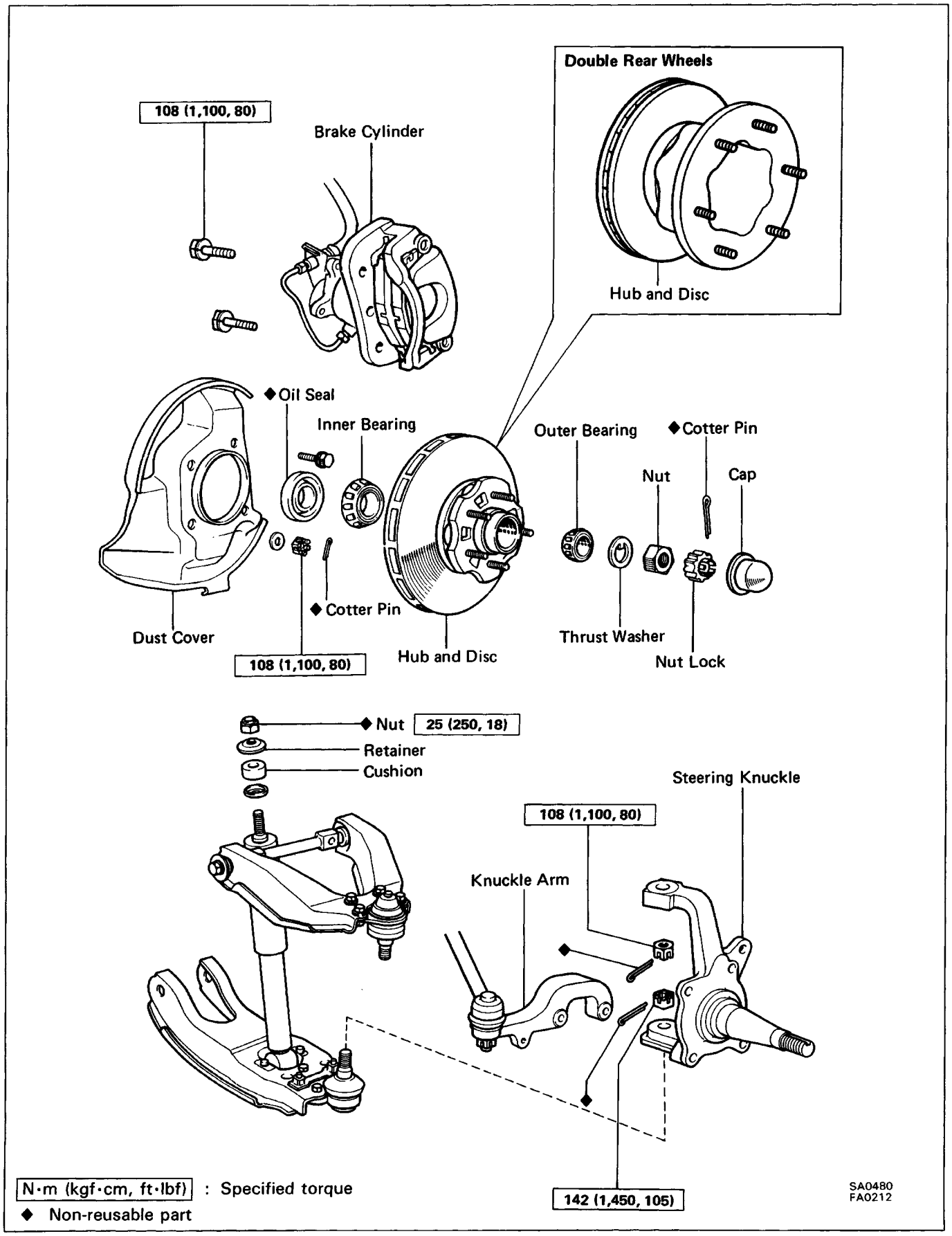

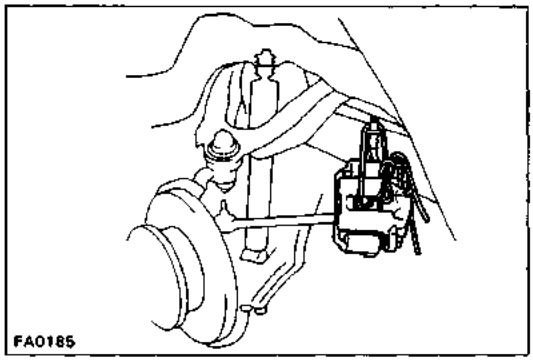

Front Axle Hub

(See page SA–11)

DISASSEMBLY OF FRONT AXLE HUB

1. REMOVE DISC BRAKE CYLINDER AND TORQUE PLATE

(a) Remove the brake cylinder and suspend it with wire.

(b) Remove the torque plate.

HINT: Do not disconnect the brake tube and hose.

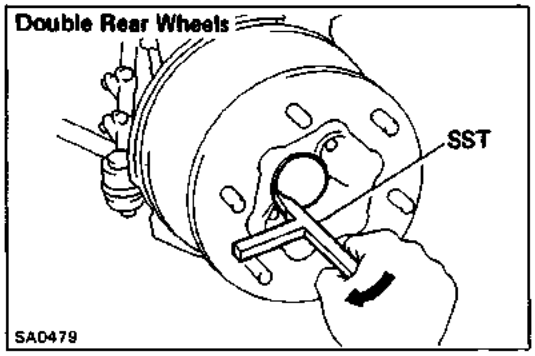

2. REMOVE AXLE HUB WITH DISC

(a) (Single rear wheel)

Remove the cap.

(Double rear wheels)

Using SST, pry off the cap.

SST 09504–22011

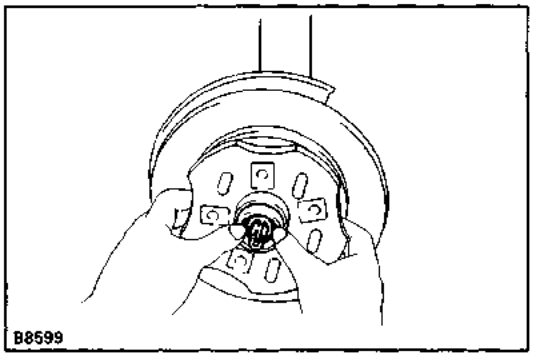

(b) Remove the hub and disc together with the outer bearing and thrust washer.

HINT: Be careful not to drop the outer bearing.

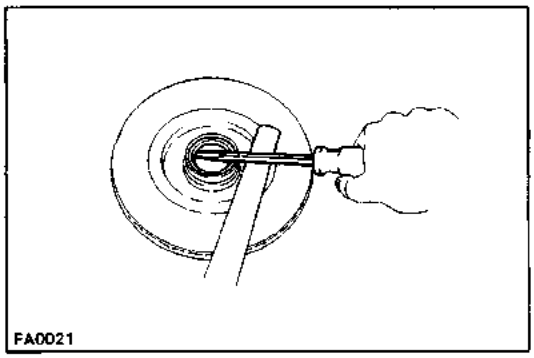

3. REMOVE INNER BEARING AND OIL SEAL

(a) Using a screwdriver, pry out the oil seal.

(b) Remove the inner bearing from the hub.

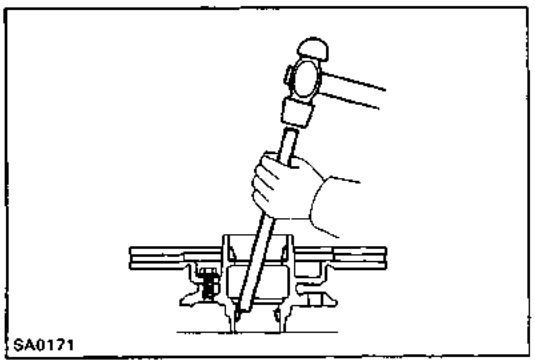

INSPECTION AND REPAIR OF FRONT AXLE HUB

1. INSPECT BEARING

Clean the bearings and outer races and inspect them for wear or damage.

2. REPLACE BEARING OUTER RACE

(a) Using a brass bar and hammer, drive out the bearing outer race.

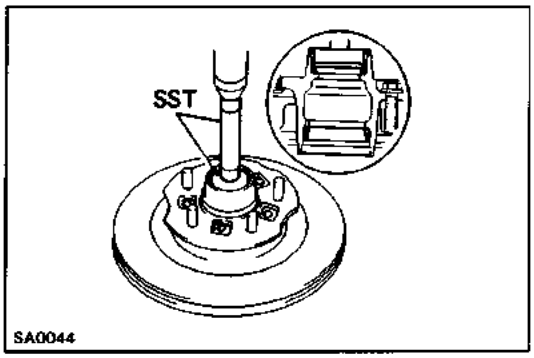

(b) Using SST, carefully drive in a new bearing outer race.
SST 09608–30012
(Inside race 09608–04020, 09608–04100)
(Outside race 09608–04020, 09608–04060)

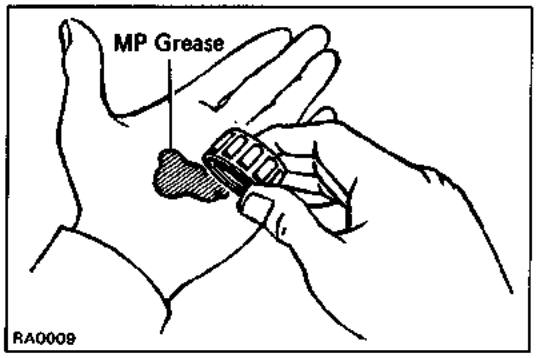

ASSEMBLY OF FRONT AXLE HUB

1. PACK BEARINGS WITH MP GREASE

(a) Place MP grease in the palm of your hand.

(b) Pack grease into the bearing, continuing until the grease oozes out from the other side.

(c) Do the same around the bearing circumference.

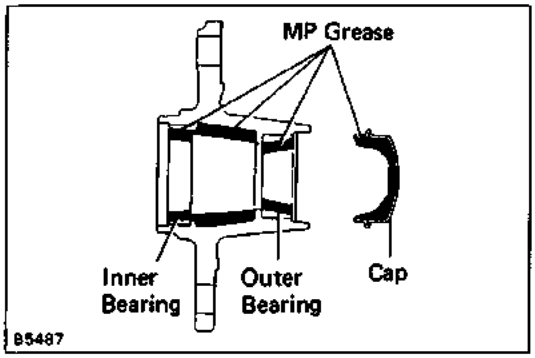

2. COAT INSIDE OF HUB AND CAP WITH MP GREASE

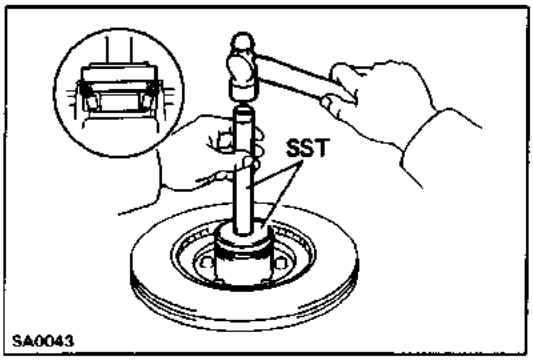

3. INSTALL INNER BEARING AND OIL SEAL

Place inner bearing into the hub. Using SST, drive the oil seal into the hub. Coat the oil seal with MP grease.
SST 09608–30012 (09608–04020, 09608–04100)

4. INSTALL AXLE HUB ON SPINDLE

(a) Place the axle hub on the spindle.

(b) Install the outer bearing and thrust washer.

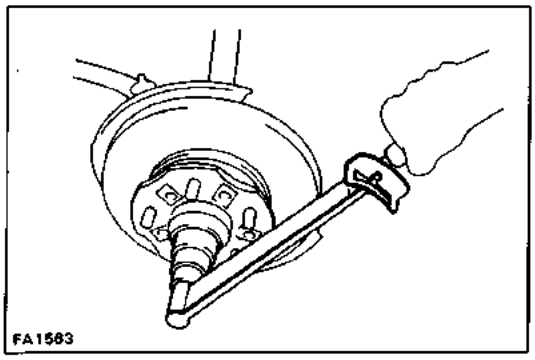

5. ADJUST PRELOAD

(a) Install and torque the nut.

Torque: 34 N–m (350 kgf–cm, 25 ft–lbf)

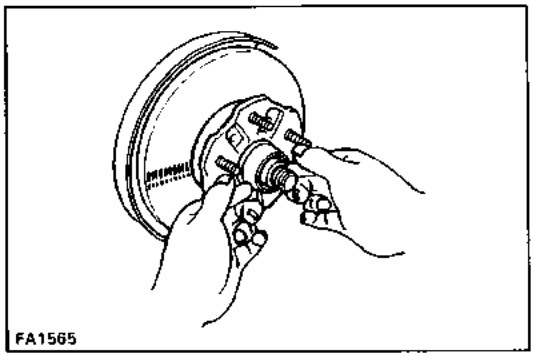

(b) Snug down the bearing by turning the hub several times.

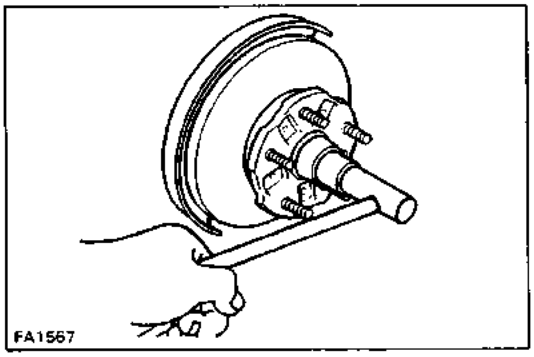

(c) Loosen the nut until it can be turned by hand.

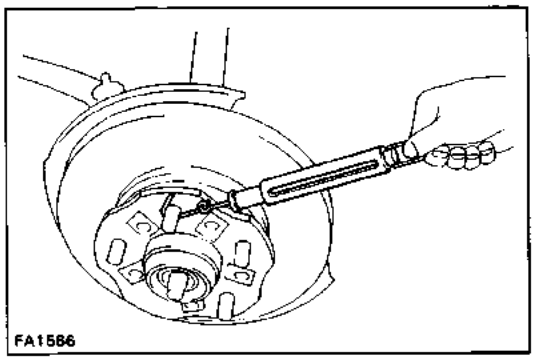

(d) Using a spring tension gauge, measure and make a note of the frictional force of the oil seal.

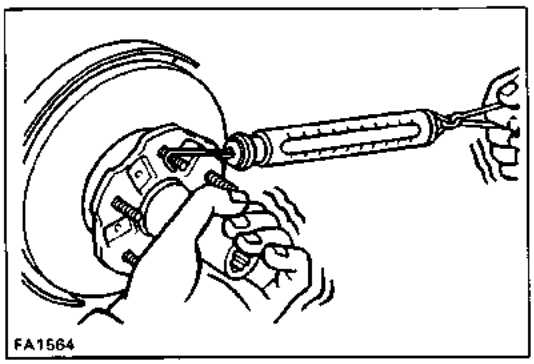

(e) Tighten the nut until the preload is within specifica–tion.

Preload (starting):

Add oil seal frictional force

Single rear wheel

5.9– 17.7N(0.6– 1.8kgf, 1.3–4.–lbf)

Double rear wheels

3.9–9.8N(0.4– 1.Okgf,0.9–2.21bf)

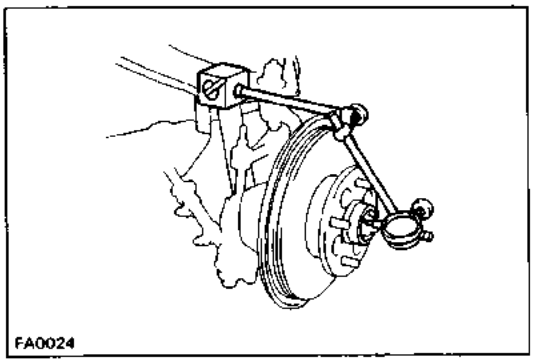

(f) Measure the hub axial play.

Axial play: 0.05 mm (0.0020 in.) or less

6. INSTALL LOCK NUT, COTTER PIN AND GREASE CAP

7. INSTALL BRAKE CYLINDER AND TORQUE PLATE ONTO STEERING KNUCKLE

Torque: 34 N–m (350 kgf–cm, 25 ft–lbf)

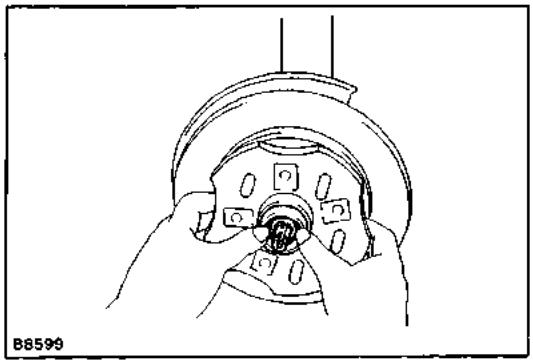

Steering Knuckle

(See page SA–11)

REMOVAL OF STEERING KNUCKLE

1. REMOVE FRONT AXLE HUB AND BRAKE CALIPER

(See page SA–12)

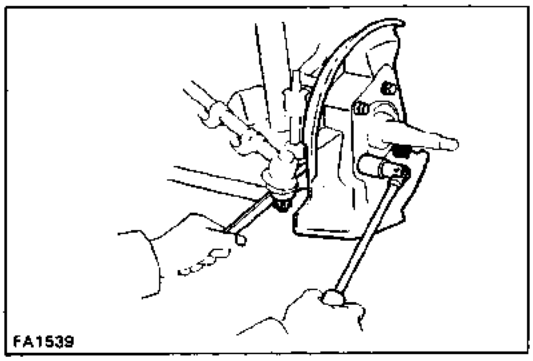

2. REMOVE DUST COVER

(a) Remove the two bolts.

(b) Remove the two cotter pins, nuts and bolts and re–move the dust cover.

(c) Remove the knuckle arm from the steering knuckle.

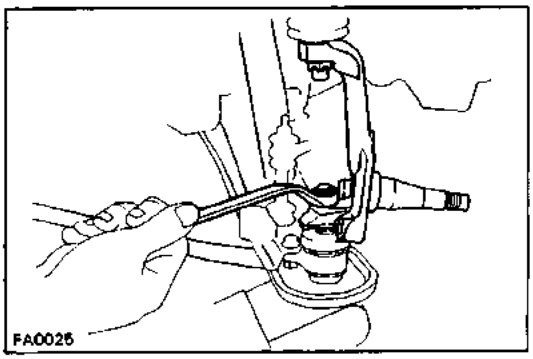

3. REMOVE STEERING KNUCKLE

(a) Support the lower arm with a jack.

(b) Remove the two cotter pins and two nuts.

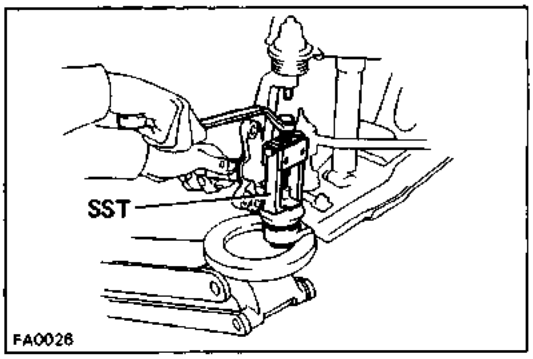

(c) Using SST, disconnect the steering knuckle from the lower ball joint.
SST 09628–62011

(d) Using SST, disconnect the steering knuckle from the upper ball joint.
SST 09628–62011

(e) Remove the steering knuckle.

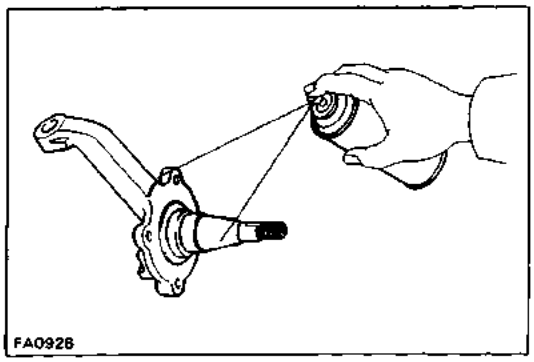

INSPECTION OF STEERING KNUCKLE

INSPECT STEERING KNUCKLE

Using a dye penetrant, check the steering knuckle for cracks.

If a crack is found, replace the steering knuckle.

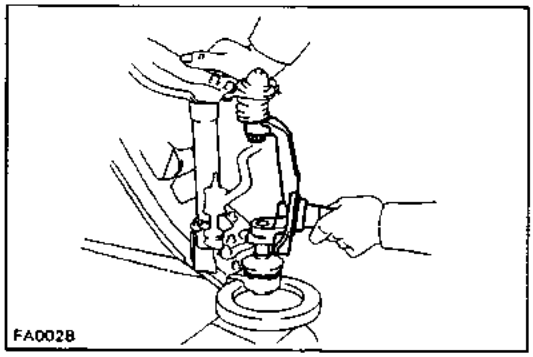

INSTALLATION OF STEERING KNUCKLE

1. INSTALL STEERING KNUCKLE

(a) Support the lower arm with a jack.

(b) Install the steering knuckle to the upper ball joint and install the nut.

(c) Push the upper arm and steering knuckle down and install the steering knuckle to the lower ball joint and install the nut.

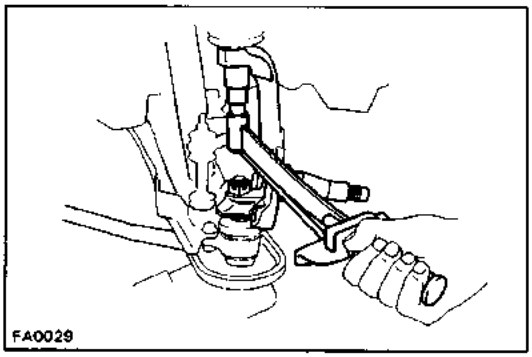

(d) Torque the upper ball joint nut.

Torque: 108 N– m (1,100 kgf–cm, 80 ft–lbf)

(e) Torque the lower ball joint nut.

Torque: 142 N–m (1,450 kgf–cm, 105 ft–lbf)

(f) Install new cotter pins.

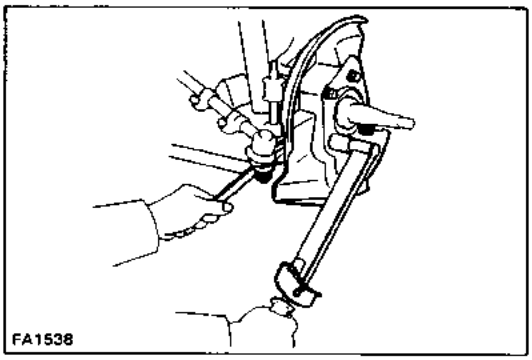

2. INSTALL KNUCKLE ARM AND DUST COVER

(a) Install the knuckle arm and the dust cover.

(b) Torque the bolts and nuts.

Torque: 108 N–m (1,100 kgf–cm, 80 ft–lbf)

(c) Secure the nuts with new cotter pins.

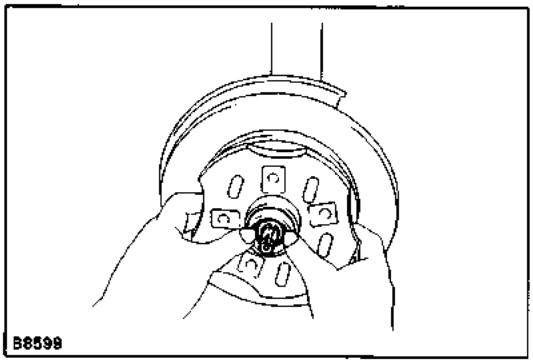

3. INSTALL FRONT AXLE HUB AND BRAKE CALIPER

(See page SA–13)

4. CHECK FRONT WHEEL ALIGNMENT

(See page SA–3)

FRONT SUSPENSION

COMPONENTS

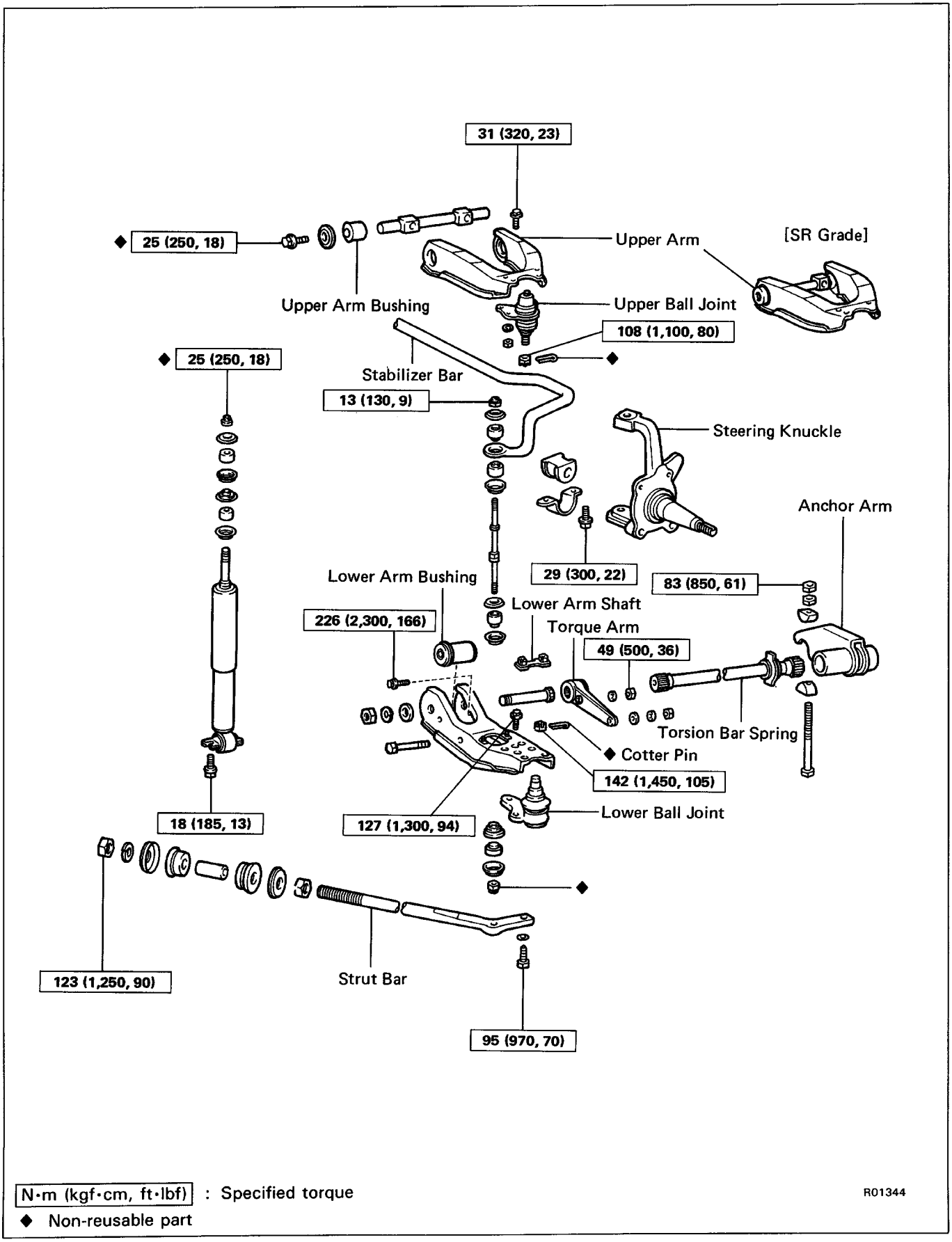

N·m (kgf·cm, ft·lbf) : Specified torque

◆ Non-reusable part

R01344

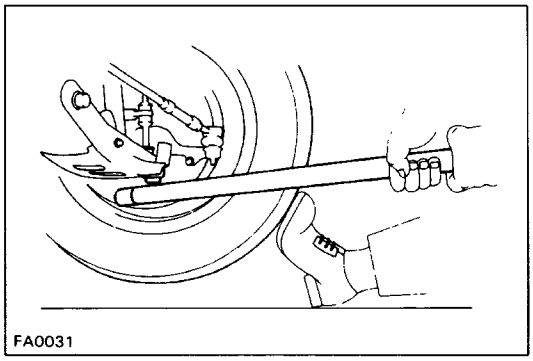
FA0031

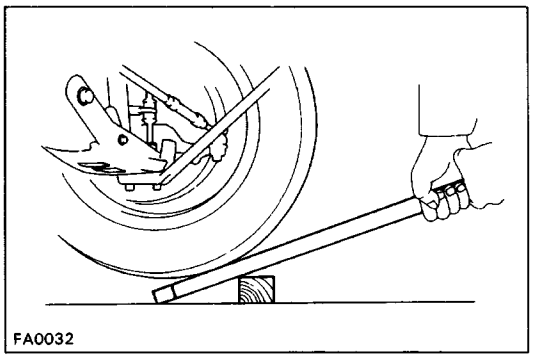
FA0032

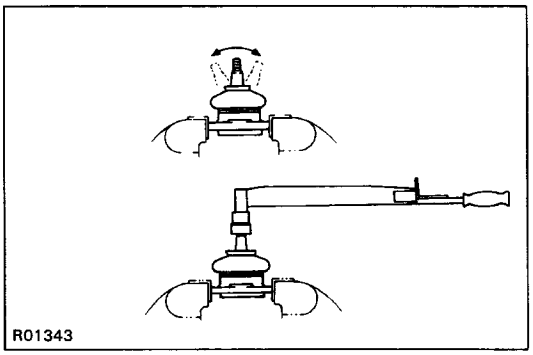
R01343

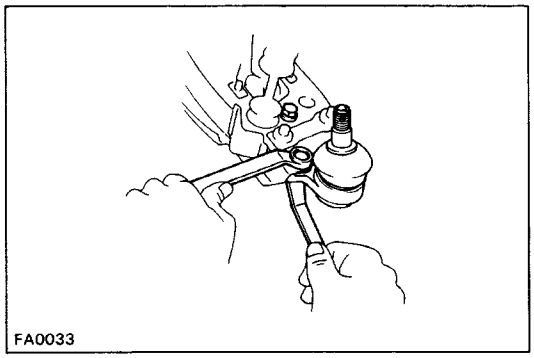
FA0033

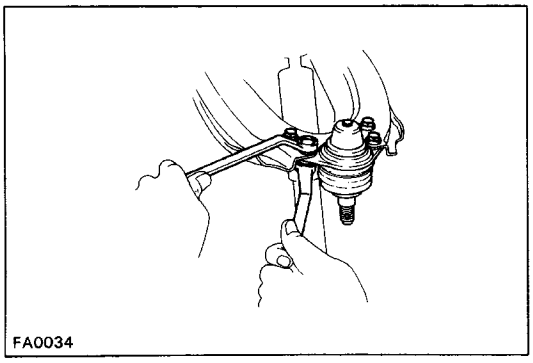
FA0034

Ball Joint

(See page SA–17)

INSPECTION OF BALL JOINTS

1. INSPECT LOWER BALL JOINT FOR EXCESSIVE LOOSENESS

(a) Jack up the front of the vehicle and support it with stands.

(b) Make sure the front wheels are in a straight forward position, and depress the brake pedal.

(c) Move the lower arm up and down and check that the lower ball joint has no excessive play.

Maximum vertical play: 0 mm (0 in.)

2. INSPECT UPPER BALL JOINT FOR EXCESSIVE LOOSENESS

Move the wheel up and down and check that the upper ball joint has no excessive play.

Maximum vertical play: 2.3 mm (0.091 in.)

3. INSPECT BALL JOINT ROTATION CONDITION

(a) Remove the ball joint.

(b) As shown in the figure, flip the ball joint stud back and forth 5 times before installing the nut.

(c) Using a torque gauge, turn the nut continuously one turn every 2–4 seconds and take the torque reading on the 5th turn.

Torque (turning):

Lower ball joint 0.1 – 4.9 N–m
(1– 50 kgf –cm, 1 – 43 in.–lbf)

Upper ball joint 2.0 – 3.9 N–m
(20– 40 kgf –cm, 17 – 35 in.–lbf)

REMOVAL OF BALL JOINTS

1. REMOVE STEERING KNUCKLE

(See page SA–15)

2. REMOVE LOWER BALL JOINT FROM LOWER ARM

3. REMOVE UPPER BALL JOINT FROM UPPER ARM

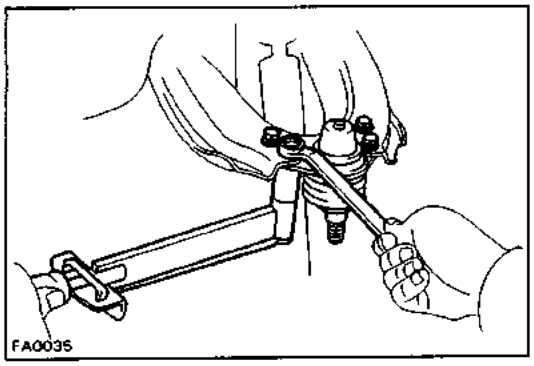

INSTALLATION OF BALL JOINTS

1. INSTALL UPPER BALL JOINT TO UPPER ARM

Torque: 31 N–m (320 kgf–cm, 23 ft–lbf)

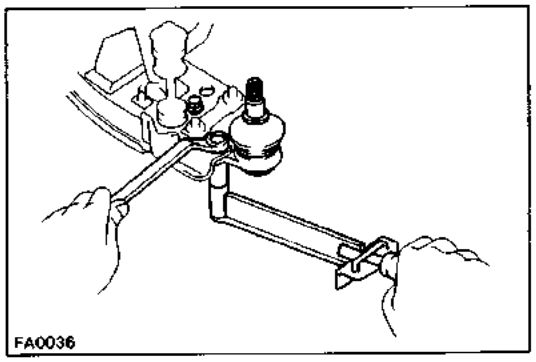

2. INSTALL LOWER BALL JOINT TO LOWER ARM

Torque: 127 N–m (1,300 kgf–cm, 94 ft–lbf)

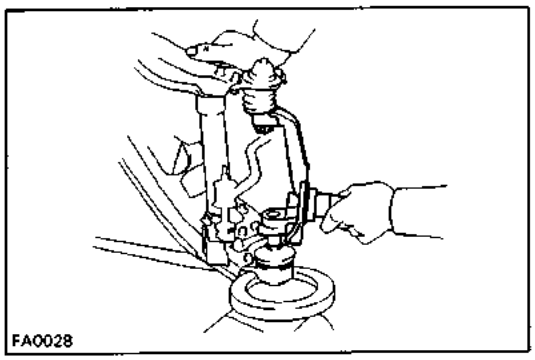

3. INSTALL STEERING KNUCKLE

(See page SA–16)

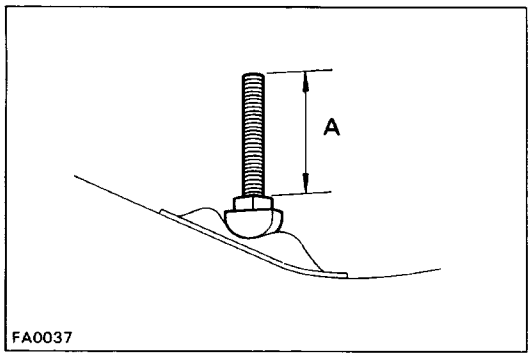

Torsion Bar Spring

(See page SA–17)

REMOVAL OF TORSION BAR SPRING

1. JACK UP AND SUPPORT FRAME ON STANDS

2. REMOVE LOCK NUT AND MEASURE PROTRUDING BOLT END ”A”, AS SHOWN

HINT: Use this measurement for reference when adjust–ing the chassis ground clearance.

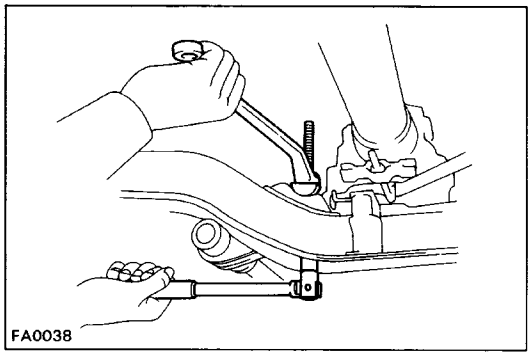

3. REMOVE DUST COVER

4. LOOSEN ADJUSTING NUT UNTIL NO TENSION ON TORSION BAR

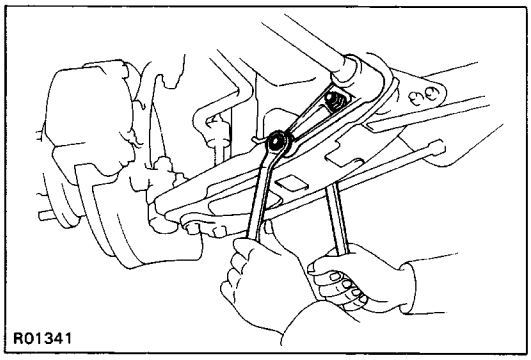

5. REMOVE TORQUE ARM, TORSION BAR SPRING AND ANCHOR ARM

(a) Remove the torque arm mounting nuts.

(b) Remove the anchor arm from the adjusting bolt and then remove the torsion bar together with the torque arm and anchor arm.

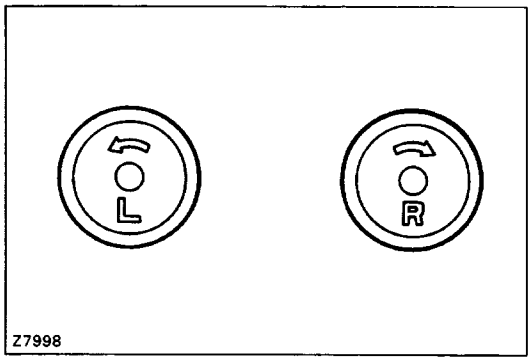

INSTALLATION OF TORSION BAR SPRING

HINT: There are left and right identification marks on the rear end of the torsion bar springs.

Be careful not to interchange the torsion bar springs.

1. INSTALL TORSION BAR SPRING AND ANCHOR ARM AND TORQUE ARM

(a) Apply a light coat of MP grease to the spline of the torsion bar spring.

(b) Align the toothless portion and install the anchor arm to the torsion bar spring.

(c) Align the toothless portion and install the torque arm to the torsion bar spring.

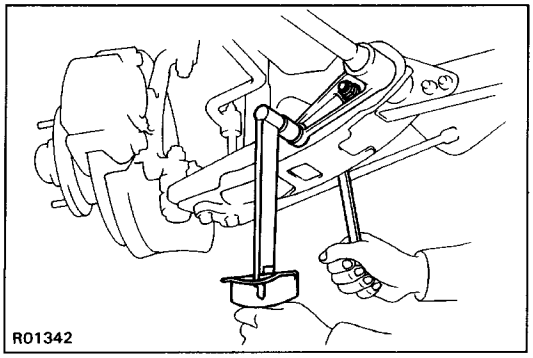

(d) Install the torsion bar spring torque arm side and in–stall the anchor arm to the adjusting bolt.

(e) Torque the torque arm nuts.

Torque: 49 N–m (500 kgf–cm, 36 ft–lbf)

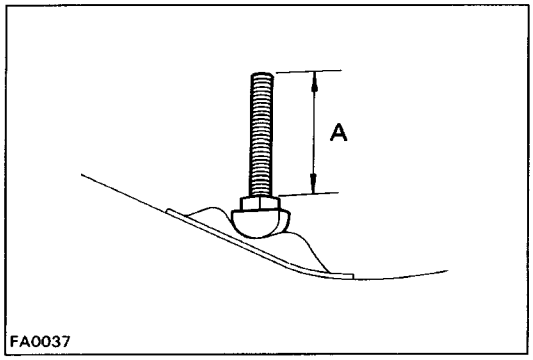

(f) Tighten the adjusting nut so that the bolt protrusion is equal to that before removal.

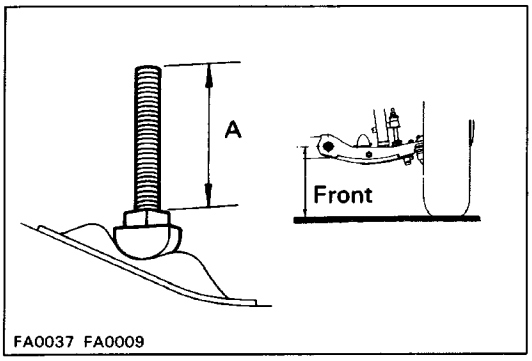

(g) Install the wheel and remove the stands. Bounce the
vehicle to settle the suspension.

(h) Adjust the chassis ground clearance by turning the adjusting nut.

Chassis ground clearance: See page A–23

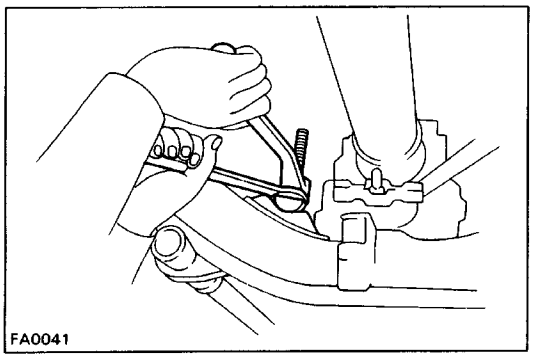

2. TORQUE LOCK NUT

Torque: 83 N–m (850 kgf–cm, 61 ft–lbf)

3. INSTALL DUST COVER

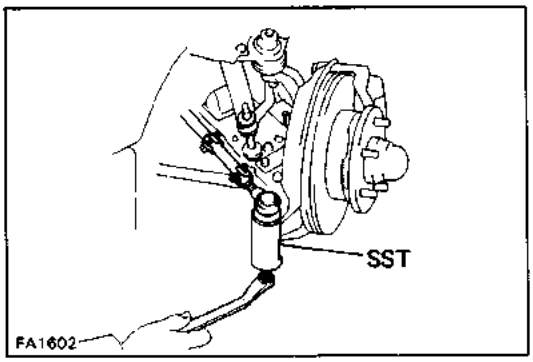

Lower Suspension Arm and Shock Absorber

(See page SA–17)

REMOVAL OF LOWER SUSPENSION ARM AND SHOCK ABSORBER

1. REMOVE TORSION BAR SPRING (See page SA–20)

2. DISCONNECT TIE ROD END

(a) Remove the cotter pin and nut.

(b) Using SST, disconnect the tie rod end.

SST 09610–20012

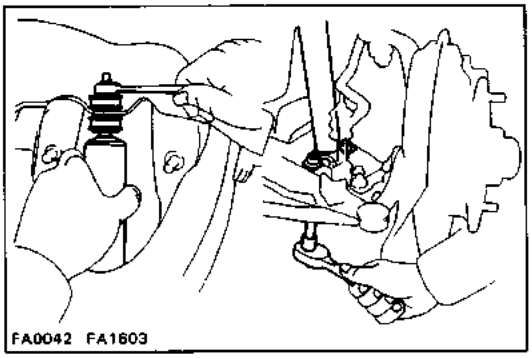

3. REMOVE SHOCK ABSORBER

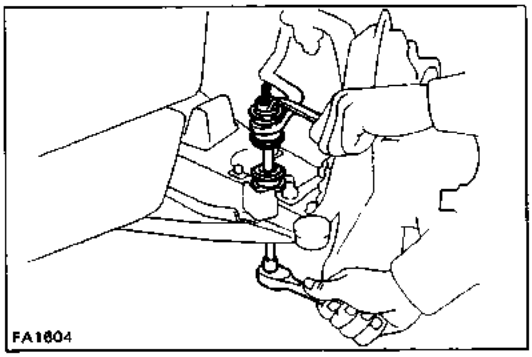

4. DISCONNECT STABILIZER BAR FROM LOWER ARM

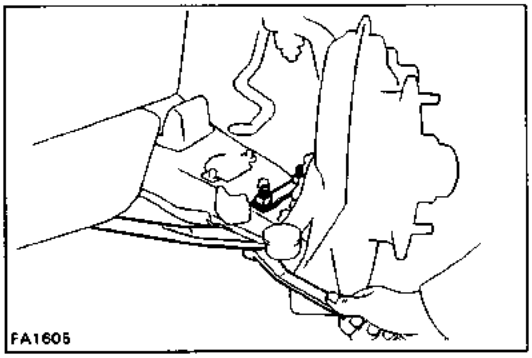

5. DISCONNECT STRUT BAR FROM LOWER ARM

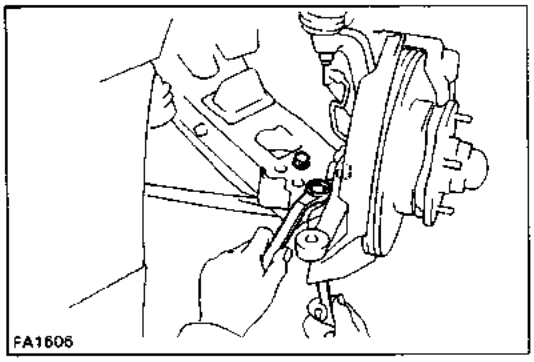

6. DISCONNECT LOWER BALL JOINT

Remove the three bolts and disconnect the lower bal joint.

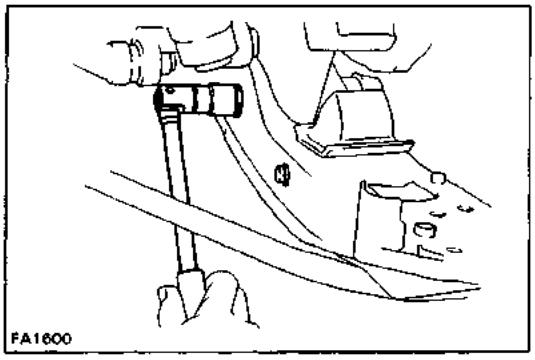

7. REMOVE LOWER SUSPENSION ARM

Remove the nut and lower suspension arm.

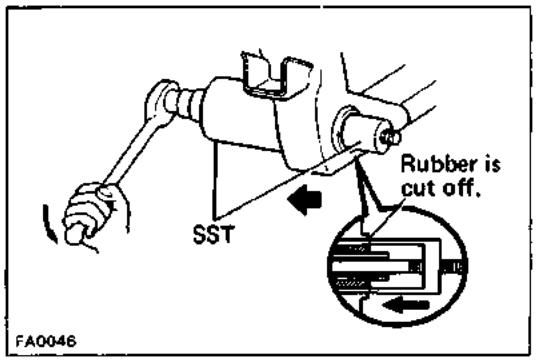

REPLACEMENT OF LOWER ARM BUSHING

1. REMOVE BUSHING

(a) Cut off the bushing rubber as shown in the figure.

(b) Using SST, remove the bushing.

SST 09726–35010

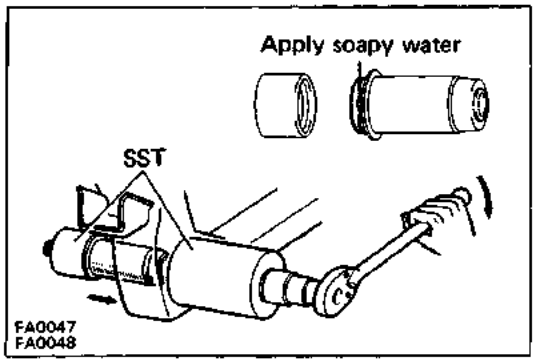

2. INSTALL BUSHING

(a) Apply soapy water on the front rubber part of the bushing and fit SST on the new bushing.

SST 09726–35010

(b) Using SST, install the new bushing.

SST 09726–35010

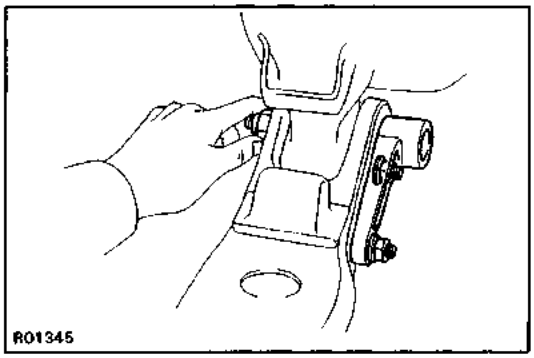

INSTALLATION OF LOWER SUSPENSION ARM AND SHOCK ABSORBER

1. INSTALL LOWER SUSPENSION ARM

(a) Install the torque arm mounting bolts to the lower arm.

(b) Place the torque arm on the lower arm shaft.

Set the lower arm in installation position, and install the lower arm shaft and torque arm.

(c) Temporarily install the torque arm.

(d) Finger tighten the lower arm, and remove the torque arm.

HINT: Do not torque the nut.

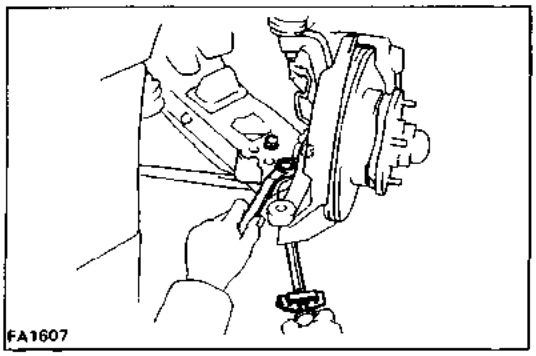

2. CONNECT LOWER BALL JOINT

Connect the lower ball joint to the lower suspension arm with the three bolts.

Torque: 127 N–m (1,300 kgf–cm, 94 ft–lbf)

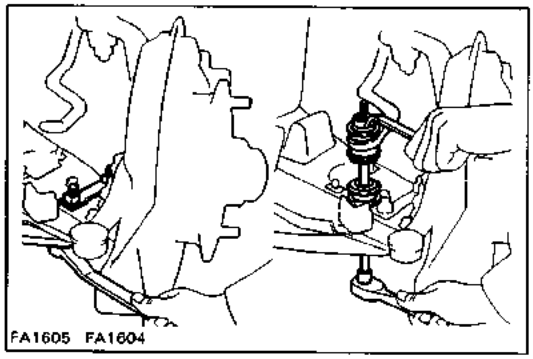

3. CONNECT STRUT BAR TO LOWER ARM

Torque: 95 N–m (970 kgf–cm, 70 ft–lbf)

4. CONNECT STABILIZER BAR TO LOWER SUSPENSION ARM

Torque: 13 N–m (130 kgf–cm, 9 ft–lbf)

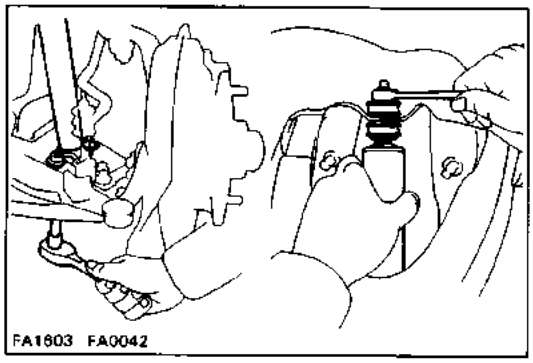

5. INSTALL SHOCK ABSORBER

(a) Install the shock absorber to the lower suspension arm.

Torque: 18 N–m (185 kgf –cm, 13 ft–lbf)

(b) Install the shock absorber to the upper bracket.

Torque: 25 N–m (250 kgf–cm, 18 ft–lbf)

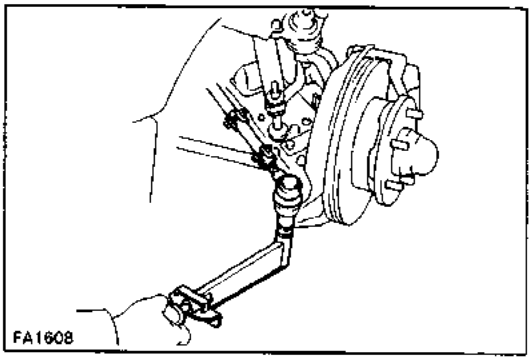

6. CONNECT TIE ROD END

(a) Connect the tie rod end to the steering knuckle arm and install and torque the nut.

Torque: 90 N–m (920 kgf–cm, 67 ft–lbf)

(b) Secure the nut with a new cotter pin.

7. INSTALL TORSION BAR SPRING

(See page SA–20)

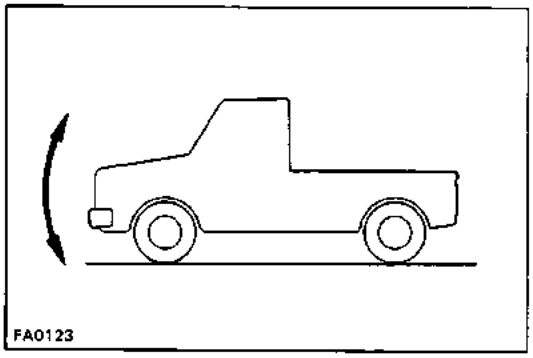

8. TORQUE LOWER SUSPENSION ARM SHAFT NUT

(a) Install the wheel.

(b) Remove the stands and bounce the vehicle up and down to stabilize the suspension.

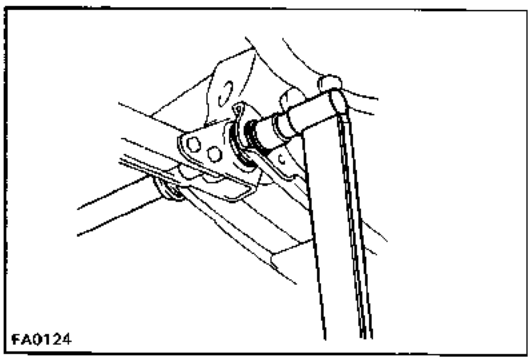

(c) Torque the nut.

Torque: 226 N–m (2,300 kgf–cm, 166 ft–lbf)

9. CHECK FRONT WHEEL ALIGNMENT

(See page SA–3)

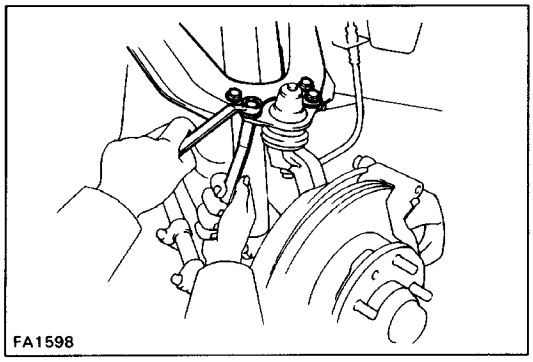

Upper Suspension Arm

(See page SA–17)

REMOVAL OF UPPER SUSPENSION ARM

1. DISCONNECT UPPER BALL JOINT FROM UPPER ARM

(a) Support the lower arm with a jack.

(b) Remove the four bolts and nuts, and disconnect the upper arm.

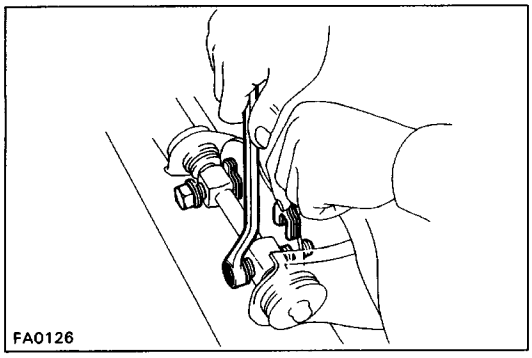

2. REMOVE UPPER SUSPENSION ARM

(a) Remove the bolts and camber adjusting shims.

(b) Remove the upper arm.

HINT: Do not loose the camber adjusting shims. Record the position, and the thickness of camber adjusting shims so that these can be reinstalled to their original location.

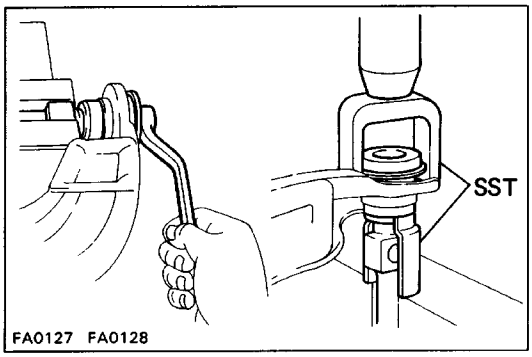

REPLACEMENT OF UPPER ARM BUSHING

1. REMOVE BUSHING

(a) Remove the bolts and washers.

(b) Using SST, push out the bushings.

SST 09710–30020 (09710–03030, 09710–03040)

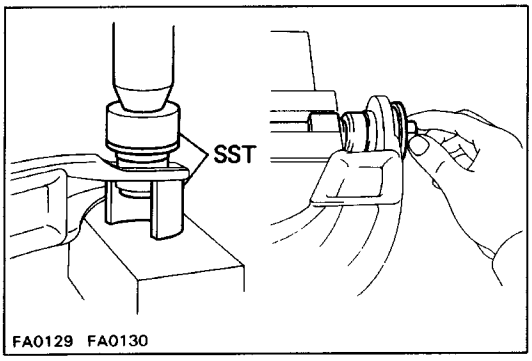

2. INSTAL BUSHING

(a) Using SST, push in the bushings.

SST 09710–30020 (09710–03060, 09710–03050)

(b) Install the washers, and finger tighten the bolts.

HINT: Do not torque the bolts.

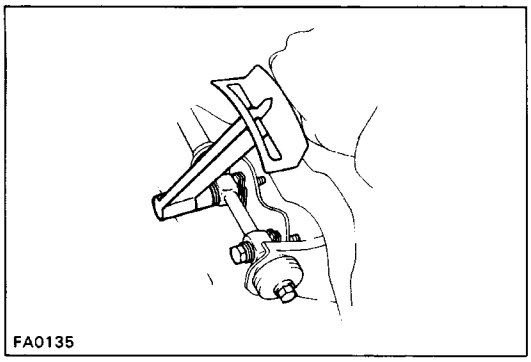

INSTALLATION OF UPPER SUSPENSION ARM

1. INSTALL UPPER ARM

(a) Install the upper arm together with the camber adjusting shims.

(b) Torque the bolts.

Torque: 96 N–m (980 kgf–cm, 71 ft–lbf)

HINT: Install an equal number and thickness of shims in their original position.

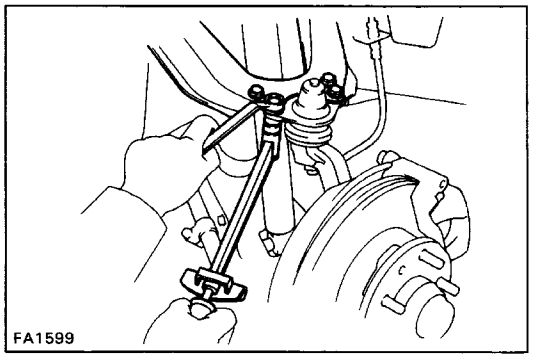

2. CONNECT UPPER ARM

Connect the upper arm with the four bolts and nuts.

Torque: 31 N–m (320 kgf–cm, 23 ft–lbf)

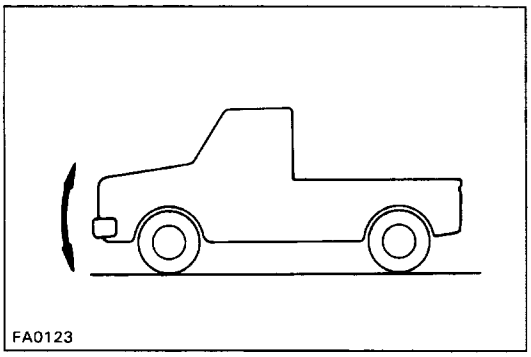

3. TORQUE UPPER ARM SHAFT BOLTS

(a) Install the wheel.

(b) Remove the stands and bounce the vehicle up and down to stabilize the suspension.

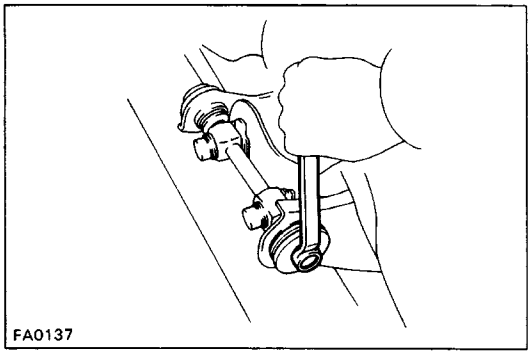

(c) Torque the upper arm shaft bolts.

Torque: 126 N–m (1,280 kgf–cm, 93 ft–lbf)

4. CHECK FRONT WHEEL ALIGNMENT

(See page SA–3)

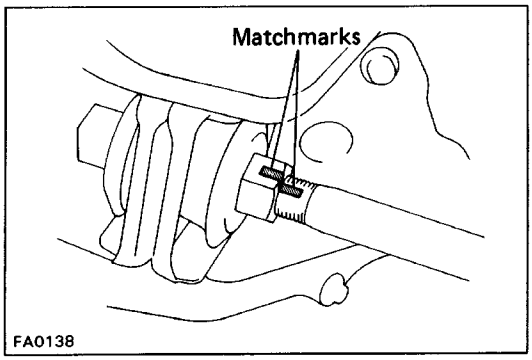

Strut Bar

(See page SA–17)

REMOVAL OF STRUT BAR

1. PLACE MATCHMARKS ON STRUT BAR

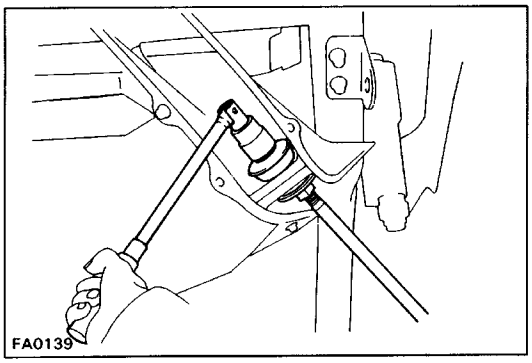

2. REMOVE FRONT NUT FROM STRUT BAR

3. REMOVE STRUT BAR FROM LOWER ARM

Remove the nuts holding the strut bar to the lower arm, and remove the strut bar.

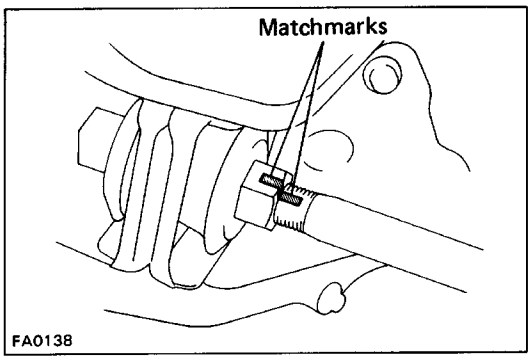

INSTALLATION OF STRUT BAR

1. INSTALL FRONT NUT

Install the front nut and align the matchmarks on the strut bar.

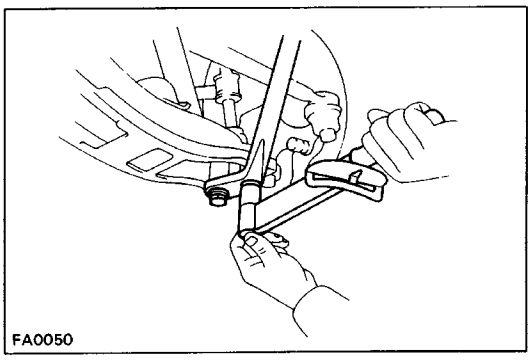

2. INSTALL STRUT BAR TO BRACKET

(a) Install the washer and bushing to the strut bar and install it to the bracket.

(b) Install the collar, bushing and washer to the strut bar.

(c) Finger tighten the front nut.

3. CONNECT STRUT BAR TO LOWER ARM

Torque: 95 N–m (970 kgf–cm, 70 ft–lbf)

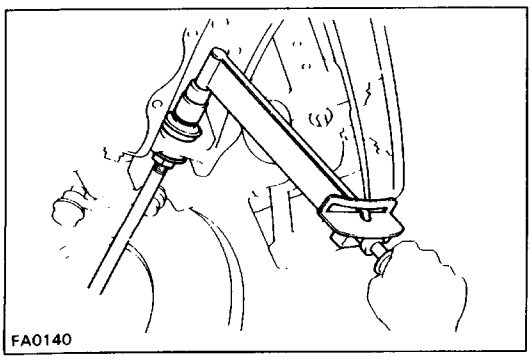

4. TORQUE FRONT NUT

(a) Remove the stands and the vehicle to stabilize the suspension.

(b) Torque the front nut.

Torque: 123 N–m (1,250 kgf–cm, 90 ft–lbf)

5. CHECK FRONT WHEEL ALIGNMENT

(See page SA–3)

Stabilizer Bar

(See page SA–17)

REMOVAL OF STABILIZER BAR

1. REMOVE ONE TORSION BAR SPRING

(See page SA–20)

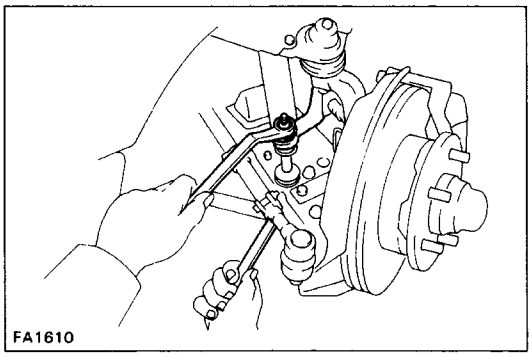

2. REMOVE STABILIZER BAR FROM LOWER ARMS

(a) Remove the nuts and cushions holding both sides of the stabilizer bar from the lower arms, and disconnect the stabilizer bar.

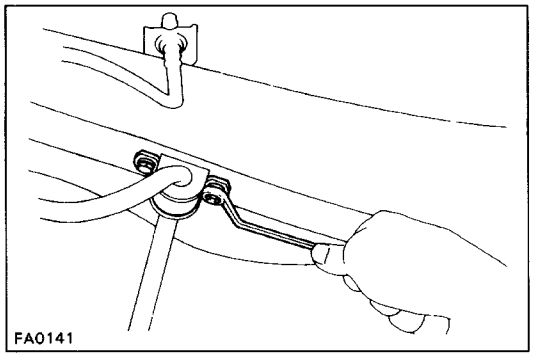

(b) Remove both stabilizer bar bushings and brackets, and remove the stabilizer bar.

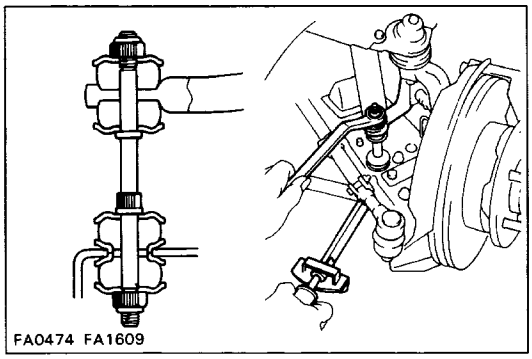

INSTALLATION OF STABILIZER BAR

1. PLACE STABILIZER BAR TO FRAME

Place the stabilizer bar in position and install both stabilizer bar bushings and brackets to the frame.
Finger tighten the bolts.

2. CONNECT STABILIZER BAR TO LOWER ARMS

Connect the stabilizer bar on both sides to the lower arms with bolts, cushions and new nuts as shown. Torque the nuts.

Torque: 13 N–m (130 kgf–cm, 9 ft–lbf)

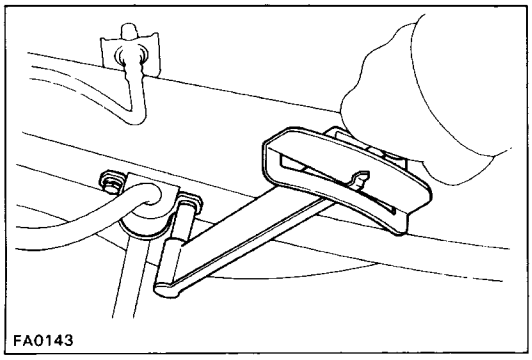

3. TORQUE BRACKET SET BOLTS

Torque: 29 N–m (300 kgf–cm, 22 ft–lbf)

4. INSTALL TORSION BAR SPRING

(See page SA–20)

FREE WHEELING HUB

COMPONENTS

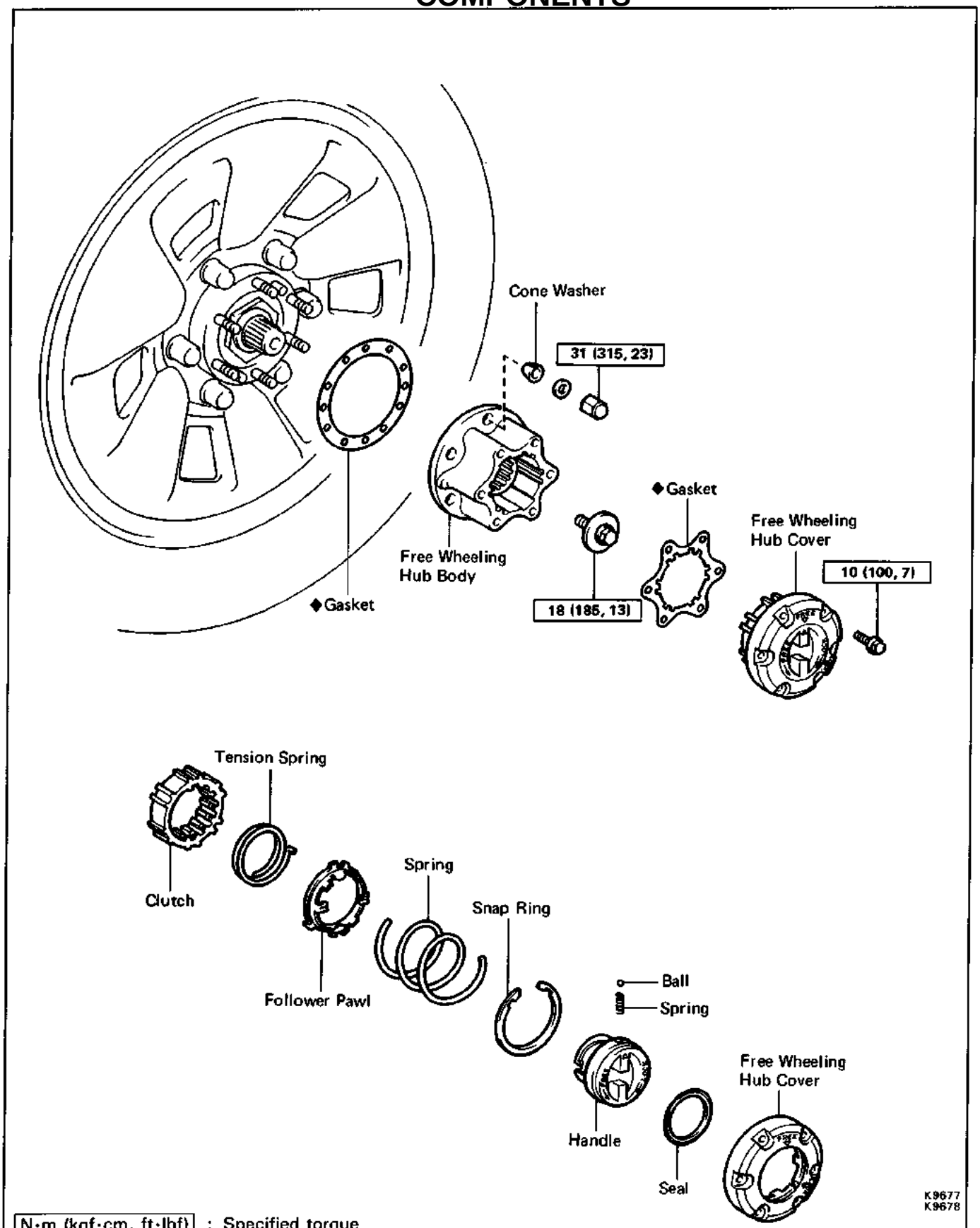

N·m (kgf·cm, ft·lbf) : Specified torque

◆ Non-reusable part

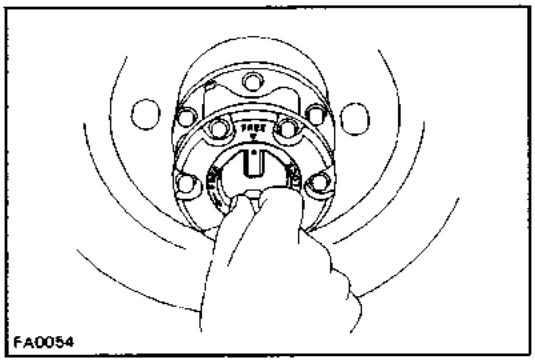

REMOVAL OF FREE WHEELING HUB

1. REMOVE FREE WHEELING HUB COVER

(a) Set the control handle to FREE.

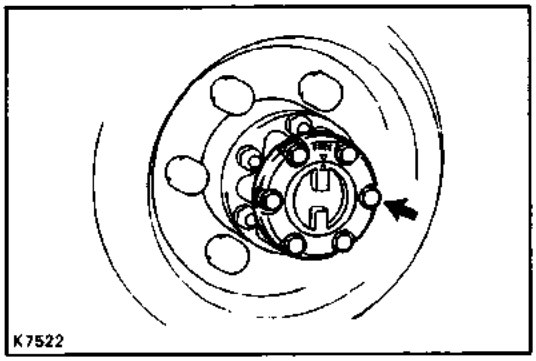

(b) Remove the cover mounting bolts and pull off the cover.

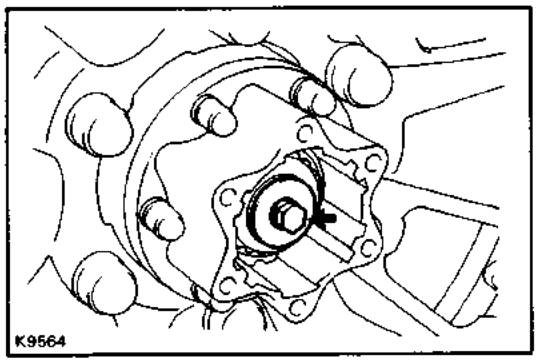

2. REMOVE BOLT WITH WASHER

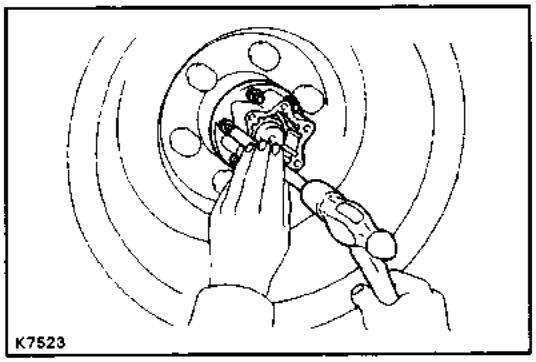

3. REMOVE FREE WHEELING HUB BODY

(a) Remove the mounting nuts and washers.
(b) Using a brass bar and hammer, tap on the bolts head and remove the cone washers.
(c) Pull off the free wheeling hub body.

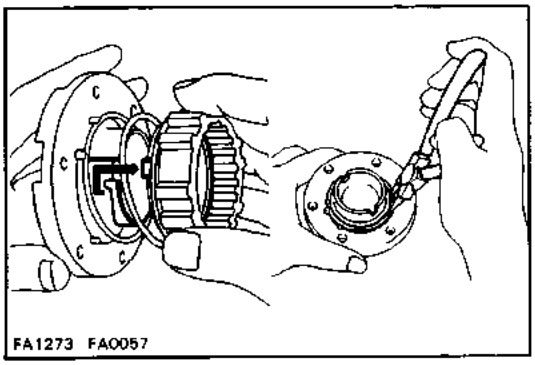

DISASSEMBLY OF FREE WHEELING HUB

1. REMOVE CONTROL HANDLE FROM FREE WHEELING HUB COVER

(a) Compressing the spring, remove the pawl tab from the handle cam, and remove the clutch.
(b) Using snap ring pliers, remove the snap ring.
(c) Remove the control handle.

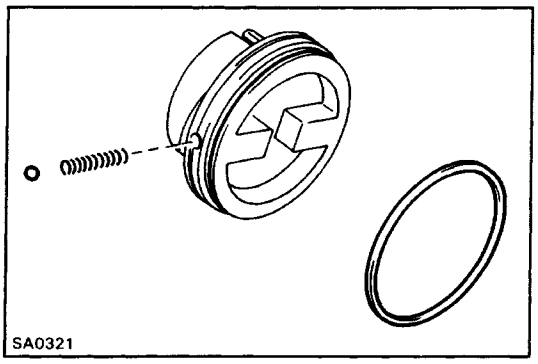

(d) Remove the steel ball, spring and seal from the con–trol handle.

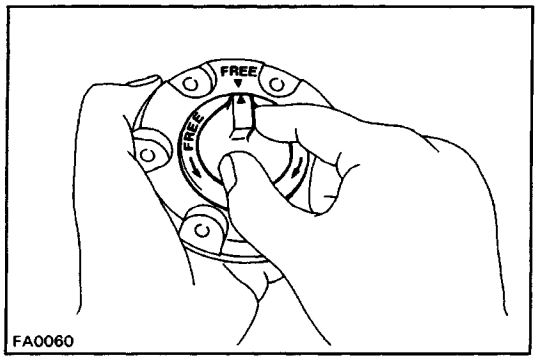

INSPECTION OF FREE WHEELING HUB

1. INSPECT COVER, HANDLE AND SEAL

Temporarily install the handle in the cover and check that the handle moves smoothly and freely.

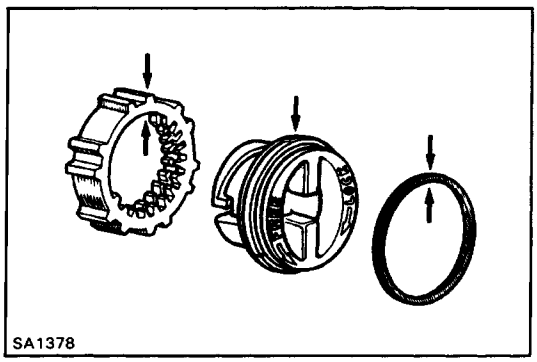

ASSEMBLY OF FREE WHEELING HUB

1. APPLY MP GREASE TO SLIDING SURFACE OF PARTS

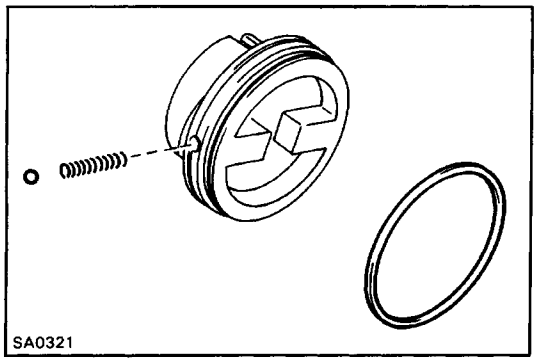

2. INSTALL CONTROL HANDLE TO COVER

(a) Install the seal, spring and steel ball to the handle.

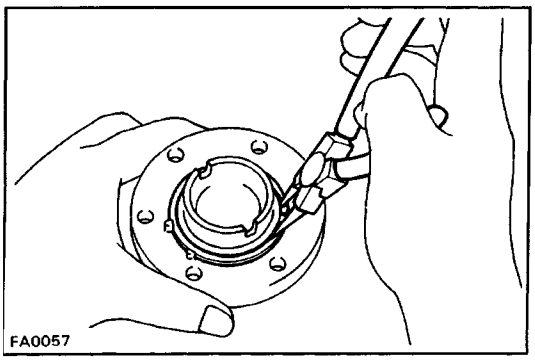

(b) Install the handle in the cover and install the snap ring with snap ring pliers.

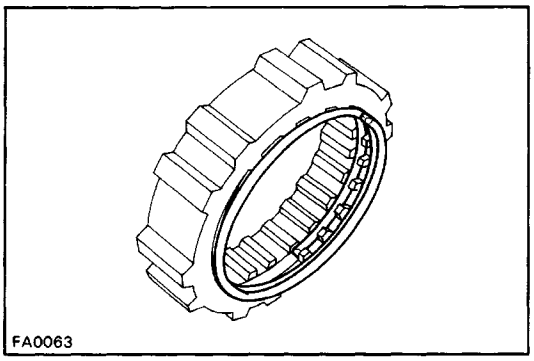
FA0063

3. INSTALL TENSION SPRING IN CLUTCH

Install the tension spring in the clutch with the spring end aligned with the initial groove.

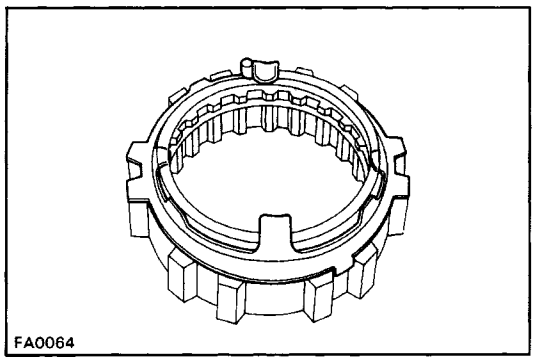
FA0064

4. INSTALL FOLLOWER PAWL TO CLUTCH

(a) Place the follower pawl on the tension spring with one of the large tabs against the bent spring end.

(b) Place the top ring of the spring on the small tabs.

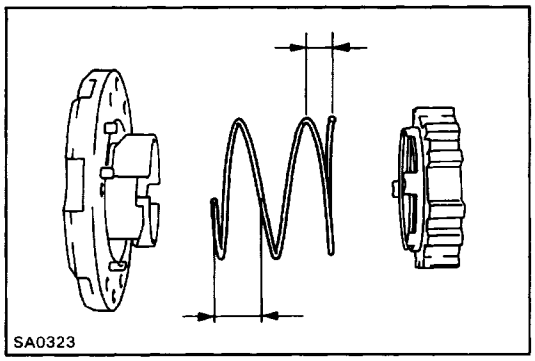
SA0323

5. INSTALL CLUTCH AND SPRING INTO COVER

(a) Place the spring between the cover and clutch with the large spring end toward the cover.

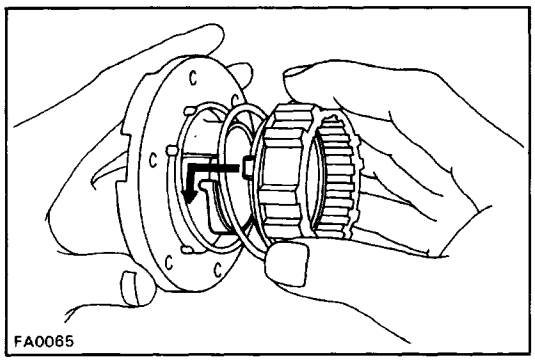
FA0065

(b) Compress the spring and install the clutch with the pawl tab fit to the handle cam.

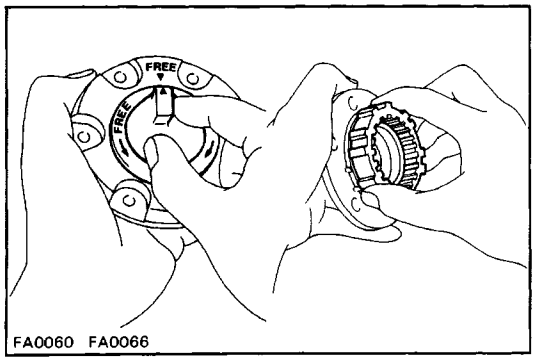

FA0060 FA0066

6. TEMPORARILY INSTALL COVER TO BODY AND CHECK FREE WHEELING HUB

(a) Set the control handle and clutch to the FREE posi– tion.

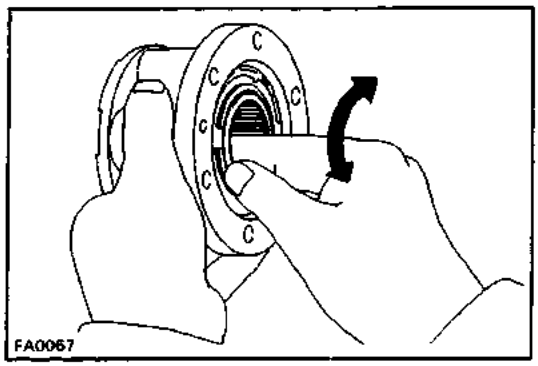

(b) Insert the cover in the body and verify that the inner hub turns smoothly.
(c) Remove the cover from the body.

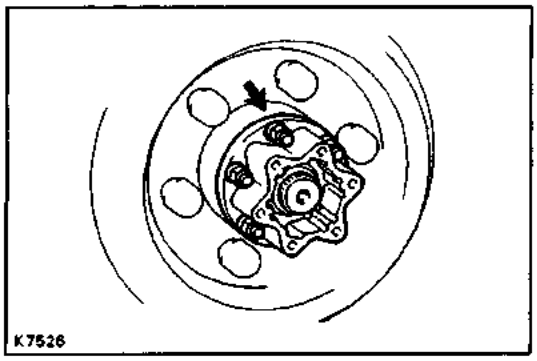

INSTALLATION OF FREE WHEELING HUB

1. INSTALL FREE WHEELING HUB BODY

(a) Place a new gasket in position on the front axle hub.
(b) Install the free wheeling hub body with six cone washers and nuts. Tighten the nuts.
Torque: 31 N–m (315 kgf–cm. 23 ft–lbf)

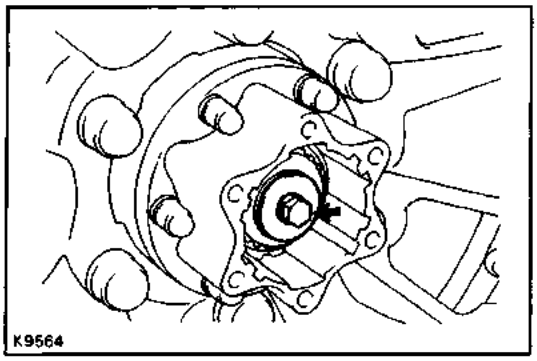

2. INSTALL BOLT WITH WASHER

Torque: 18 N–m (185 kgf–cm, 13 ft–lbf)

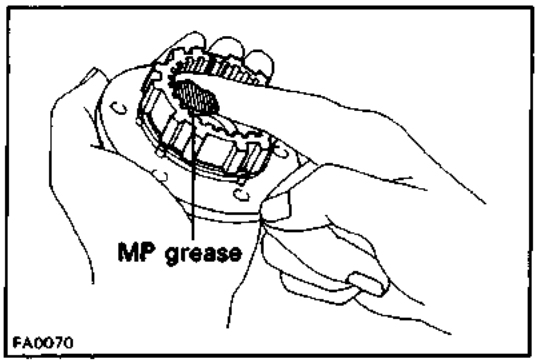

3. APPLY MP GREASE TO INNER HUB SPLINES

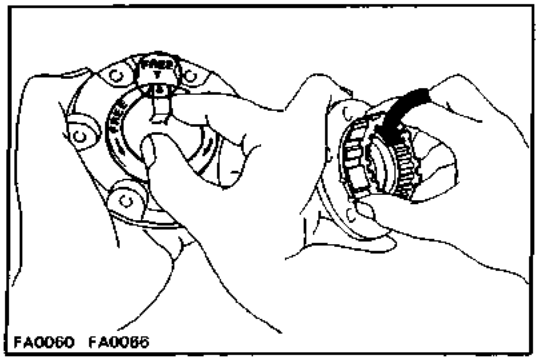

4. INSTALL FREE WHEELING HUB COVER WITH NEW GASKET

(a) Set the control handle and clutch to the FREE position.
(b) Place a new gasket in position on the cover.

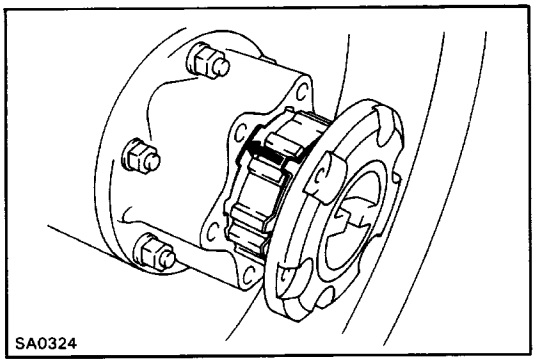

(c) Install the cover to the body with the follower pawl tabs aligned with the non–toothed portions of the body.

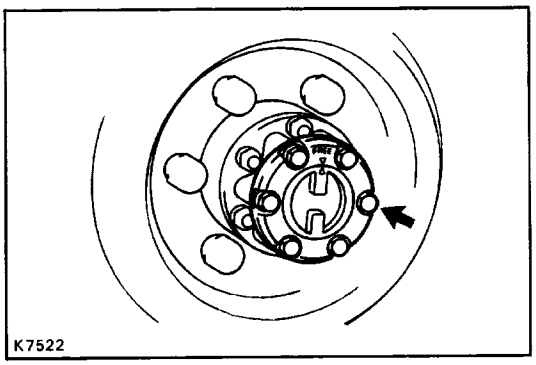

(d) Tighten the cover mounting bolts.
Torque: 10 N–m (100 kgf–cm, 7 ft–lbf)

FRONT AXLE HUB AND STEERING KNUCKLE

COMPONENTS

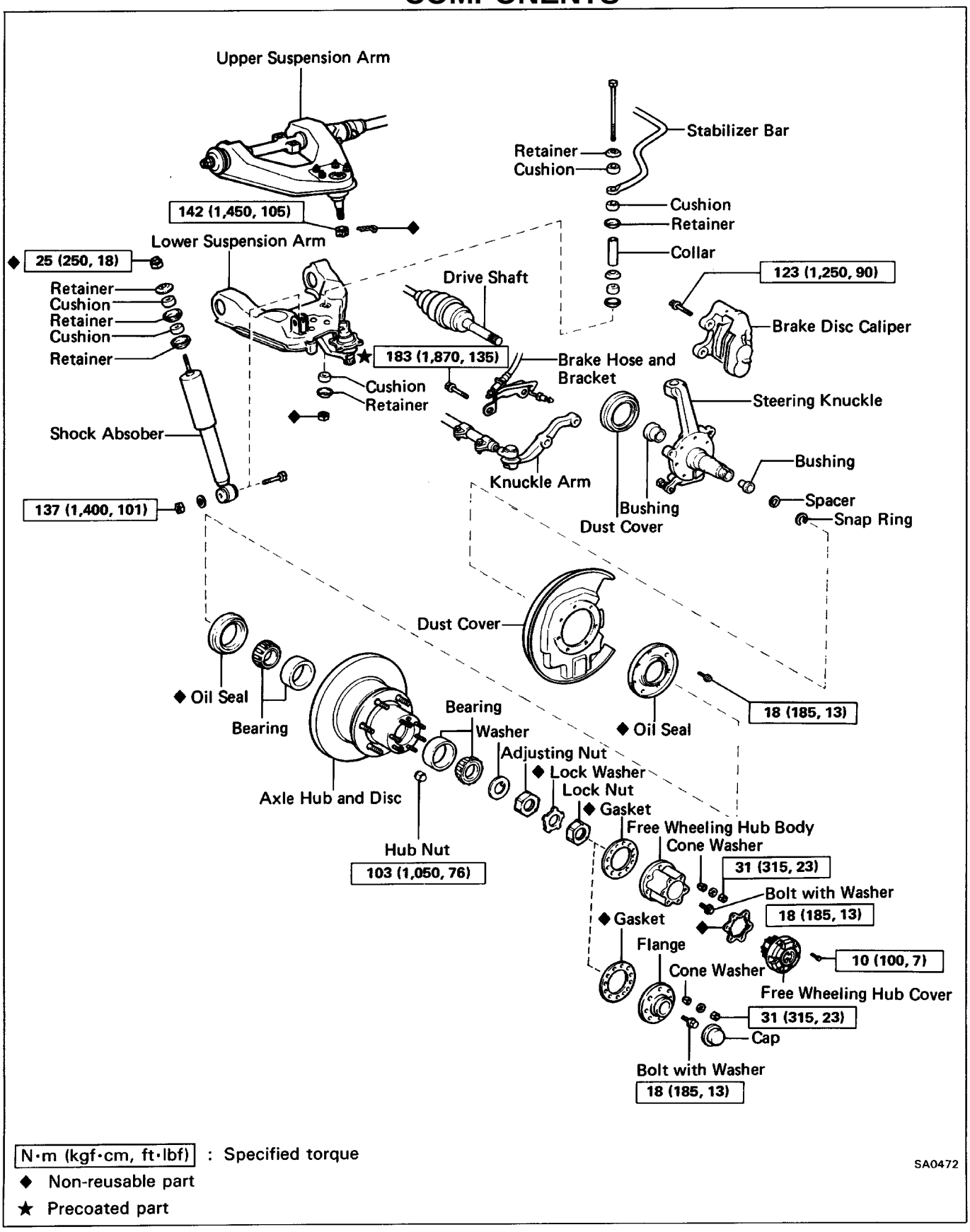

N·m (kgf·cm, ft·lbf) : Specified torque

◆ Non-reusable part

★ Precoated part

SA0472

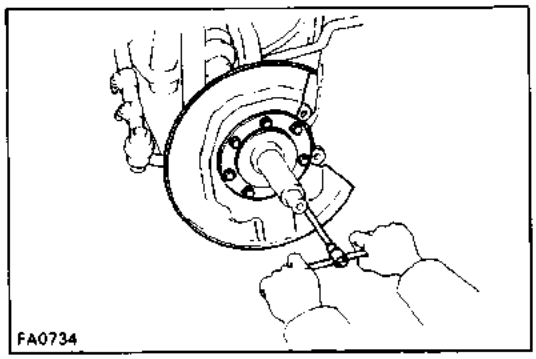

Steering Knuckle

(See page SA–35)

REMOVAL OF STEERING KNUCKLE

1. REMOVE DISC BRAKE CYLINDER AND FRONT AXLE HUB

(See page SA–36)

2. REMOVE DUST COVER AND OIL SEAL

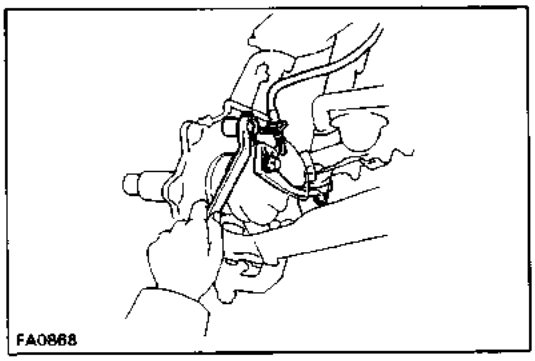

3. DISCONNECT KNUCKLE ARM FROM STEERING KNUCKLE

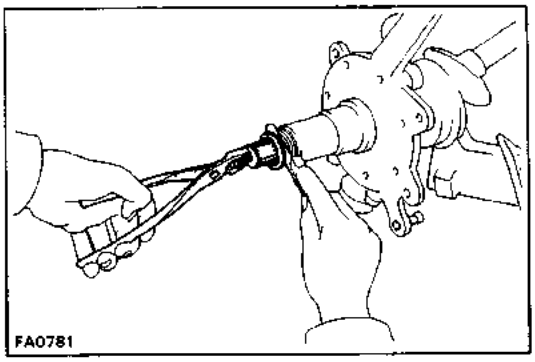

4. MEASURE STEERING KNUCKLE BUSHING THRUST CLEARANCE

(a) Install a bolt in the drive shaft.

(b) Using a feeler gauge,measure the front drive shaft thrust clearance between the steering knuckle out–side bushing and spacer, by pulling the bolt and ap–plying 98 N (10 kgf, 22.0 lbf) of pressure.

Front drive shaft thrust clearance:

Standard clearance	**0.075 – 0.690 mm (0.0030 – 0.0272 in.)**
Maximum clearance	**1.0 mm (0.039 in.)**

If the measurement more than maximum, replace the steering knuckle outside and inside bushings.

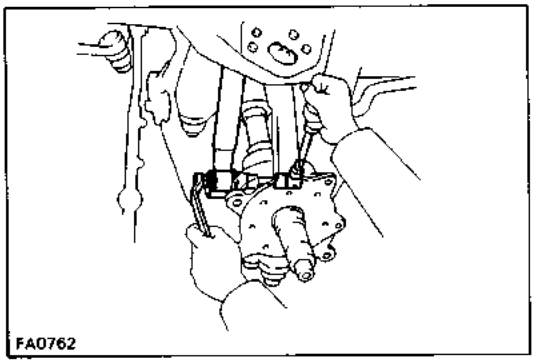

5. DISCONNECT FRONT SHOCK ABSORBER FROM LOW-ER SUSPENSION ARM

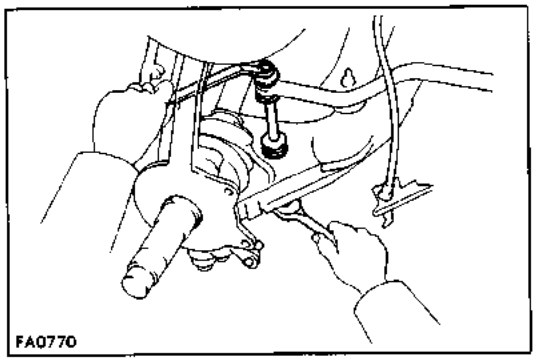

6. DISCONNECT STABILIZER BAR FROM LOWER SUSPEN SION ARM

Remove the nut, bolt, retainers, cushions and collar, an(disconnect the stabilizer bar from the lower suspension arm.

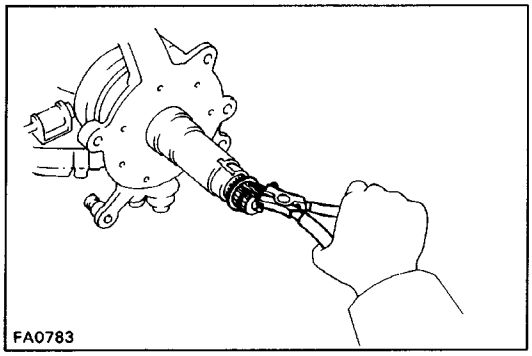

7. REMOVE SNAP RING AND SPACER

Using snap pliers, remove the snap ring and spacer.

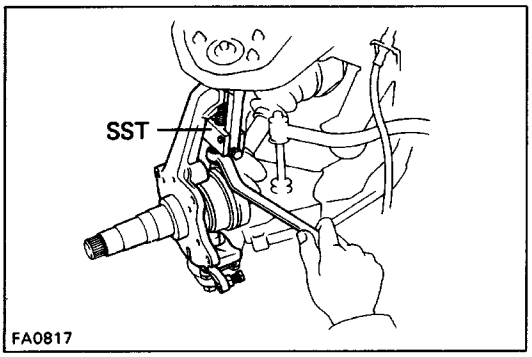

8. REMOVE STEERING KNUCKLE

(a) Remove the cotter pin and nut from the upper ball joint.

(b) Using SST, disconnect the steering knuckle from the upper ball joint.
SST 09628–62011

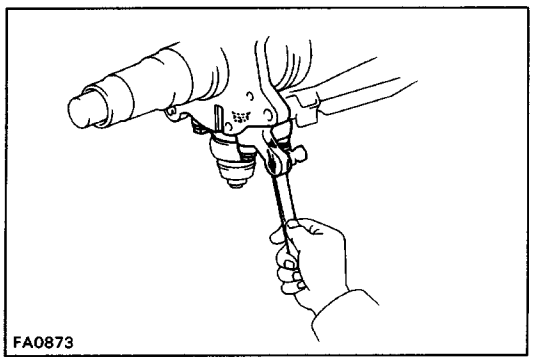

(c) Remove the four bolts from the lower ball joint and disconnect the steering knuckle from the lower ball joint.

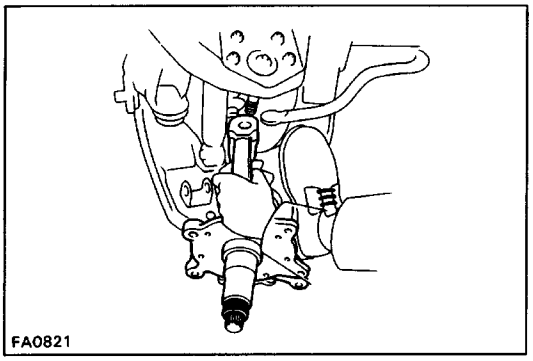

(d) Push the lower suspension arm down and remove the steering knuckle.

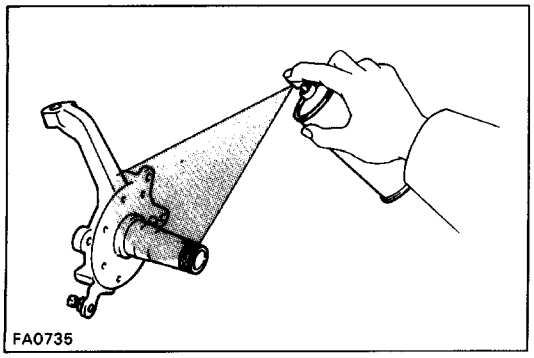

INSPECTION AND REPLACEMENT OF STEERING KNUCKLE

1. INSPECT STEERING KNUCKLE

Using a dye penetrant, check the steering knuckle for cracks.
If crack is found, replace the steering knuckle.

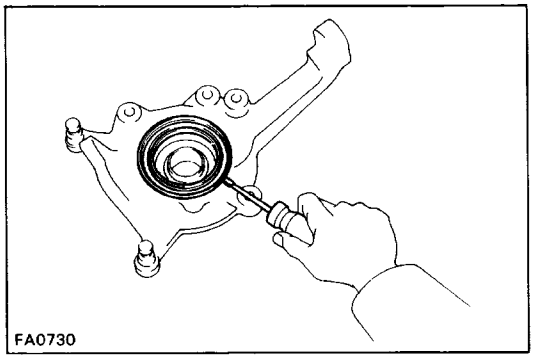

2. REMOVE DUST DEFLECTOR

Using a screwdriver, pry out the dust deflector from the steering knuckle.

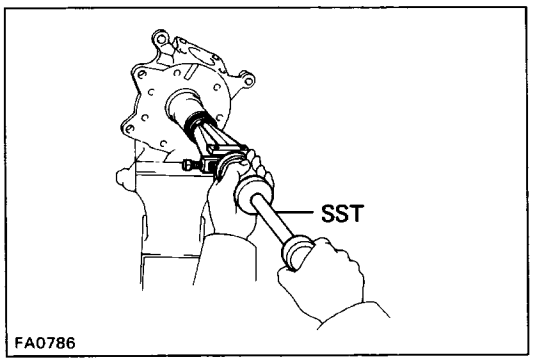

3. REMOVE STEERING KNUCKLE BUSHING

(a) Using SST, pull out the steering knuckle outside bushing.
SST 09308–00010

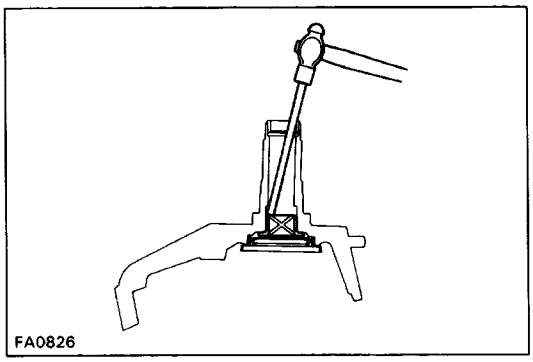

(b) Using a brass bar and hammer, drive out the steer–ing knuckle inside bushing.

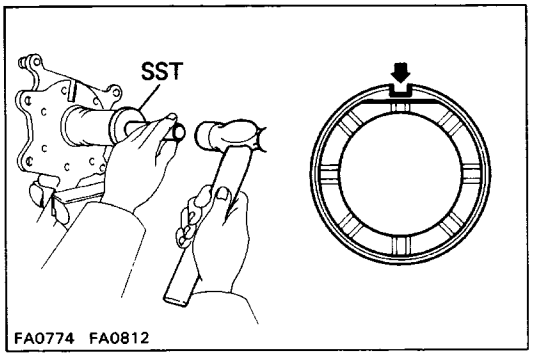

4. INSTALL STEERING KNUCKLE BUSHING

(a) Using SST and a hammer, tap in a new steering knuckle outside bushing.
SST 09550–10012 (09252–10010, 09555–10010)
HINT: When installing the bushing to the spindle, make sure the flat portion of the bushing is aligned with the spindle groove as shown in the figure.

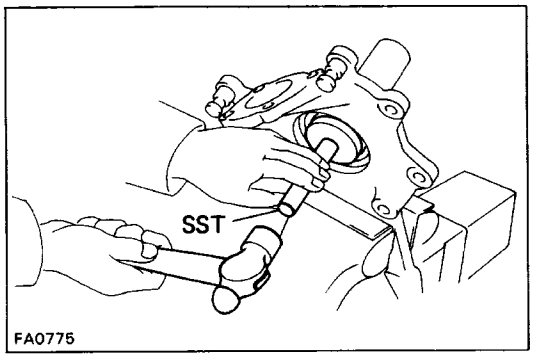

(b) Using SST and a hammer, tap in a new steering knuckle inside bushing.
SST 09550–10012 (09252–10010, 09555–10010)

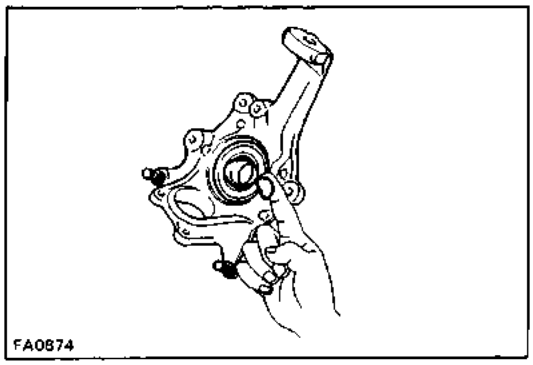

(c) Apply molybdenum disulphide lithium base grease to the steering knuckle bushings.

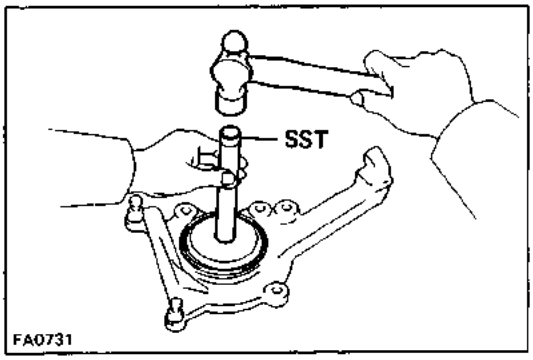

5. INSTALL DUST DEFLECTOR TO STEERING KNUCKLE

Using SST and a hammer, tap in a new dust deflector.
SST 09608–35014 (09608–06020, 09608–06180)

INSTALLATION OF STEERING KNUCKLE

(See page SA–35)

1. INSTALL STEERING KNUCKLE

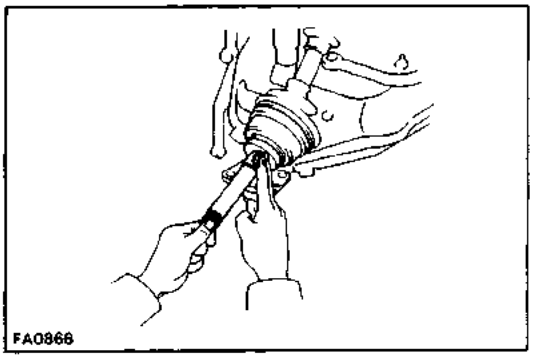

(a) Apply molybdenum disulphide lithium base grease to the drive shaft.

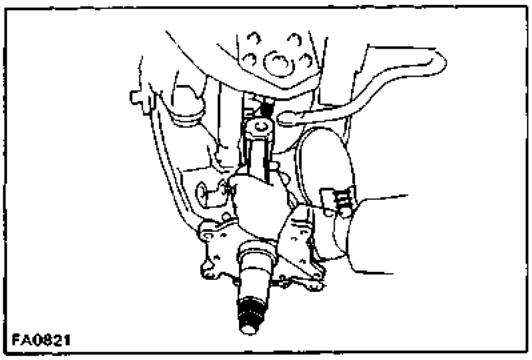

(b) Push the lower suspension arm down and install the steering knuckle.

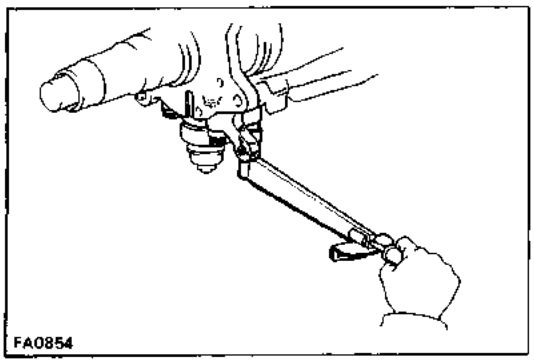

(c) Connect the lower ball joint to the steering knuckle and install and torque the four bolts.

Torque: 58 N–m (590 kgf–cm, 43 ft–lbf)

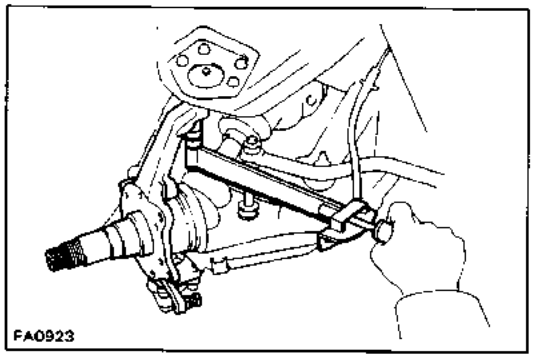

(d) Connect the upper ball joint to the steering knuckle and install and torque the nut.
Torque: 142 N–m (1,450 kgf–cm, 105 ft–lbf)

(e) Install a new cotter pin.

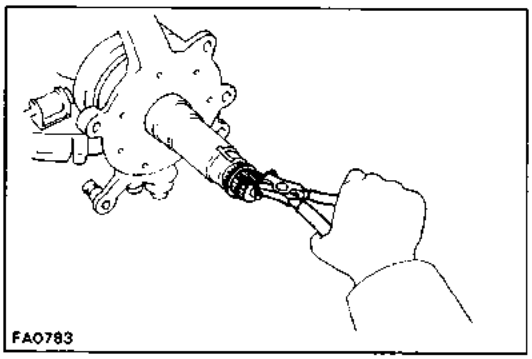

2. INSTALL SPACER AND SNAP RING

Install the spacer to the front drive shaft, and using snap ring pliers, install the snap ring.

If you replace the steering knuckle bushing, recheck the front drive shaft thrust clearance.

(a) Install the bolt in the shaft.

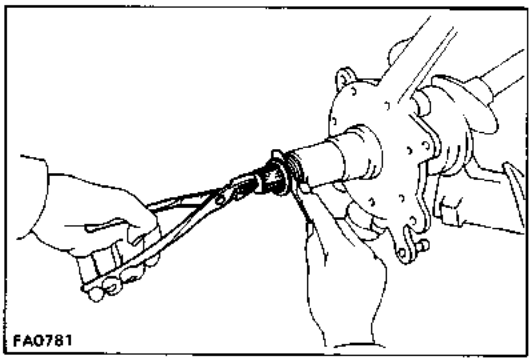

(b) Using a feeler gauge,measure the front drive shaft thrust clearance between the steering knuckle out–side bushing and spacer, by pulling the bolt and ap–plying 98 IV (10 kgf, 22.0 lbf) of pressure.

Front drive shaft thrust clearance:

Standard clearance	**0.075 – 0.690 mm (0.0030 – 0.0272 in.)**

If the clearance is not within specification, replace the spacer.

Spacer thickness	
1.80 mm	(0.0709 in.)
2.25 mm	(0.0886 in.)

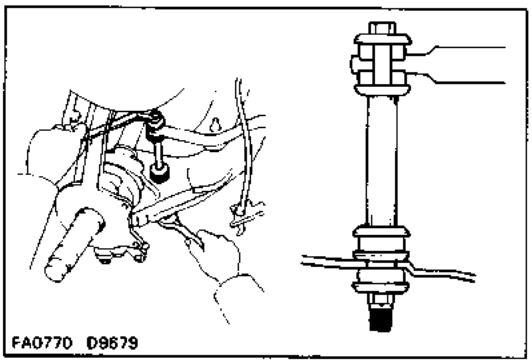

3. CONNECT STABILIZER BAR TO LOWER SUSPENSION ARM

Jack up the stabilizer bar and install the retainers, cush–ions and collar as shown in the figure, and torque the nut.
Torque: 25 N–m (260 kgf–cm, 19 ft–lbf)

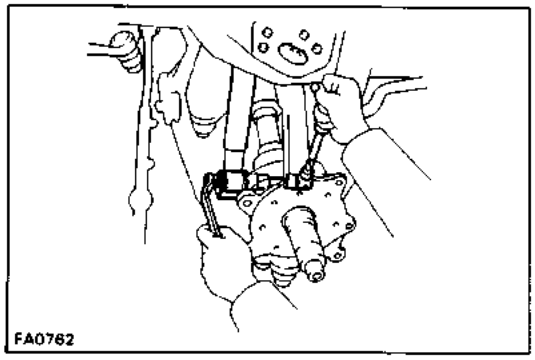

4. CONNECT FRONT SHOCK ABSORBER TO LOWER SUS–PENSION ARM

Torque: 137 N–m (1,400 kgf–cm, 101 ft–lbf)

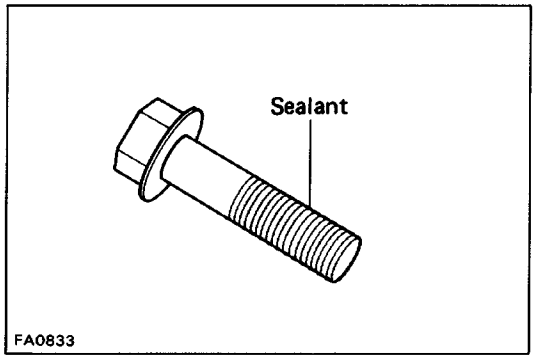

5. CONNECT KNUCKLE ARM TO STEERING KNUCKLE

(a) Clean the threads of the bolts and steering knuckle with toluene or trichloroethylene.

(b) Apply sealant to the bolt threads.
Sealant: Part No. 08833–00070, THREE BOND 1324 or equivalent.

(e) Connect the knuckle arm to the steering knuckle with brake hose bracket and torque bolts.
Torque: 183 N–m (1,870 kgf–cm, 135 ft–lbf)

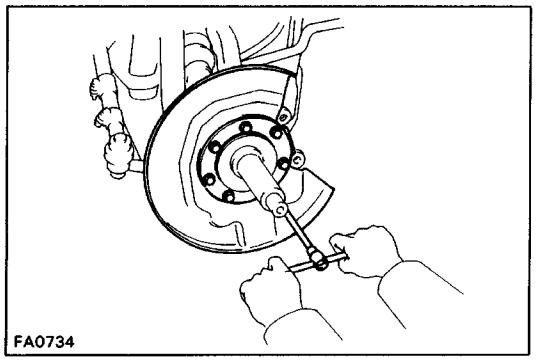

6. INSTALL DUST COVER AND NEW OIL SEAL
Torque: 18 N–m (185 kgf–cm, 13 ft–lbf)

7. INSTALL FRONT AXLE HUB AND DISC BRAKE CYLINDER
(See page SA–37)

8. BLEED BRAKE SYSTEM

FRONT DRIVE SHAFT

COMPONENTS

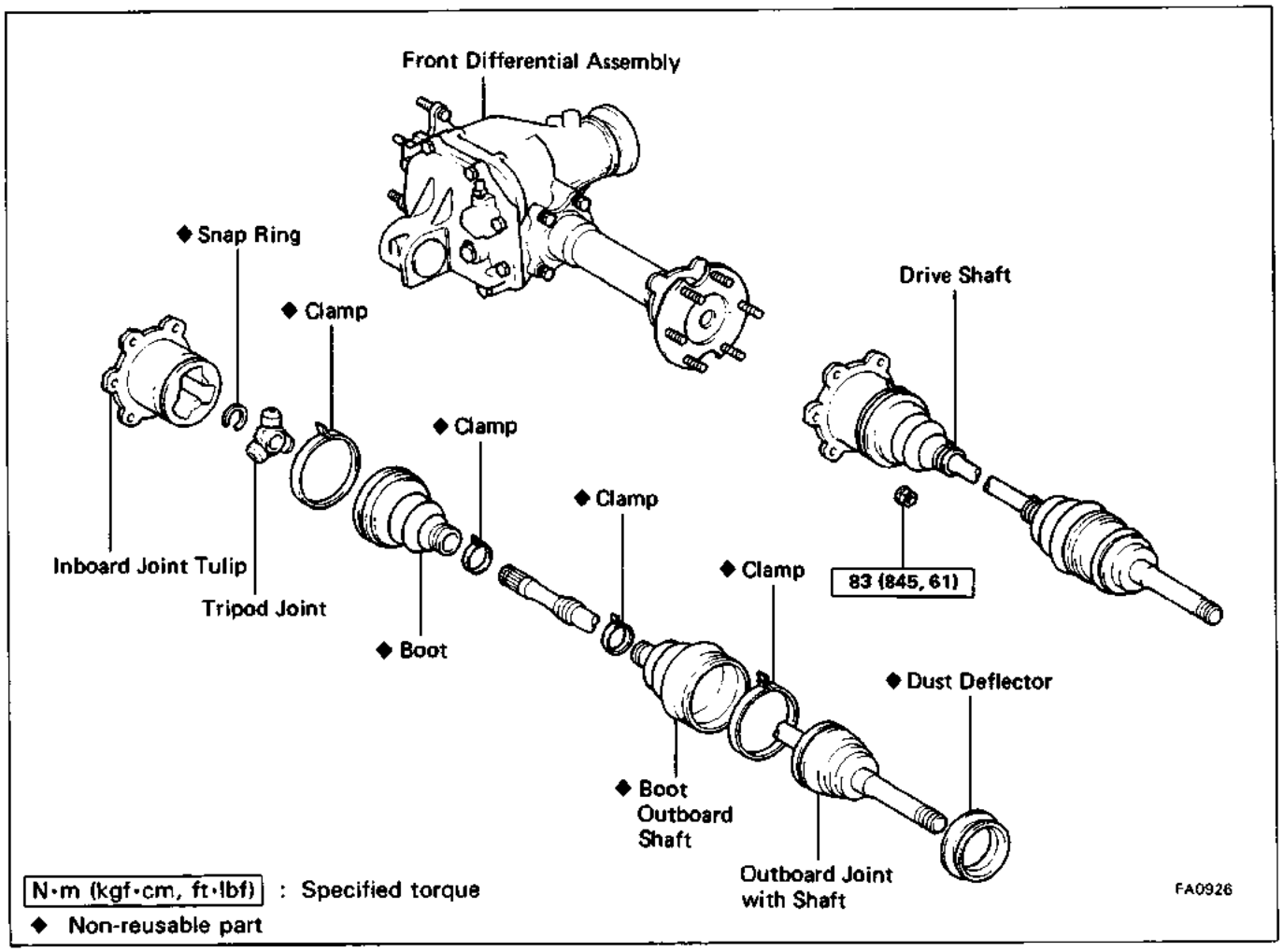

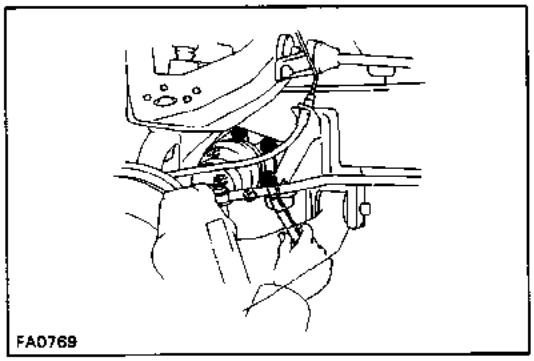

REMOVAL OF FRONT DRIVE SHAFT

1. LOOSEN NUTS HOLDING FRONT DRIVE SHAFT

Loosen the six nuts, while depressing the brake pedal.

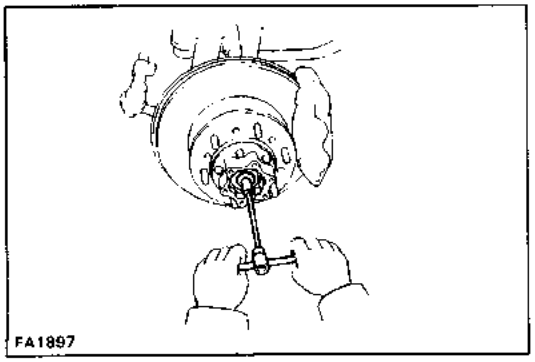

2. REMOVE FREE WHEELING HUB OR FLANGE

(Free wheeling hub See page SA–29)
(Flange See page SA–36)

3. REMOVE SNAP RING AND SPACER

Using a snap ring expander, remove the snap ring from the drive shaft.

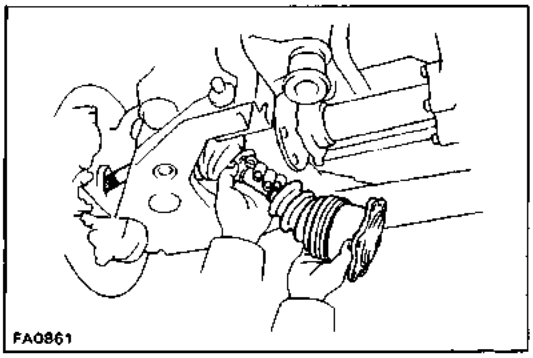

4. REMOVE FRONT DRIVE SHAFT

First pull the front drive shaft inboard joint tulip from the side gear shaft, and then pull it out from the steering knuckle.

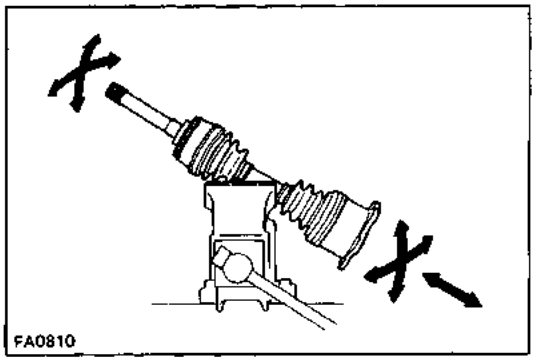

DISASSEMBLY OF FRONT DRIVE SHAFT

1. CHECK DRIVE SHAFT

(a) Check to see there is no play in the inboard and out–board joints.

(b) Check to see that the inboard joint slides smoothly in the thrust direction.

(c) Check to see that there is no noticeable play in the radial direction of the universal joints.

(d) Check for damage to the boots.

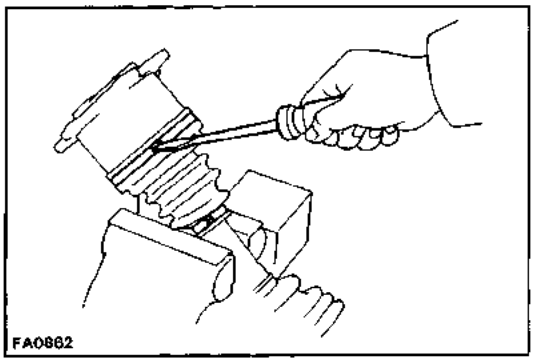

2. REMOVE INBOARD JOINT BOOT CLAMPS

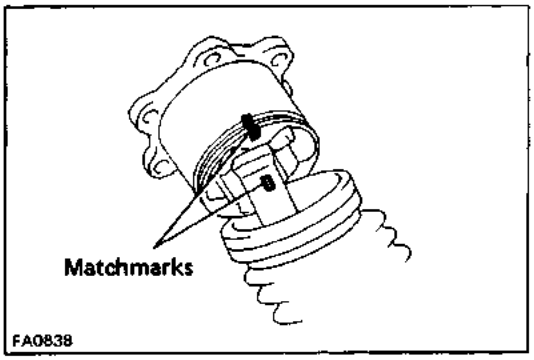

3. DISASSEMBLE INBOARD JOINT TULIP

(a) Place matchmarks on the inboard joint tulip and shaft.

NOTICE: Do not punch the marks.

(b) Remove the inboard joint tulip from the drive shaft.

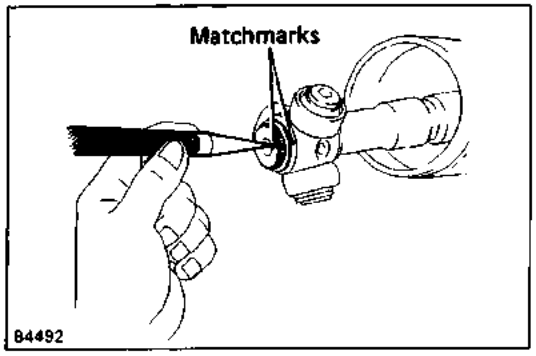

4. DISASSEMBLE TRIPOD JOINT

(a) Using a snap ring expander, remove the snap ring.

(b) Using a punch and hammer, place matchmarks on the shaft and tripod.

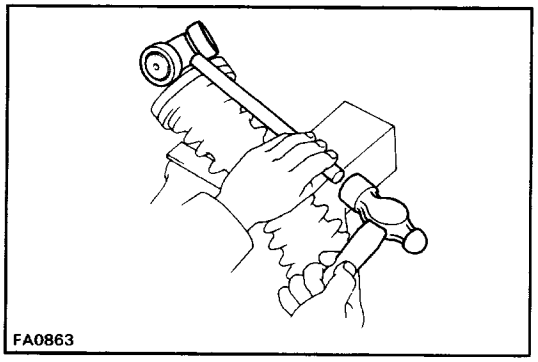

(c) Using a brass bar and hammer, remove the tripod joint from the drive shaft.

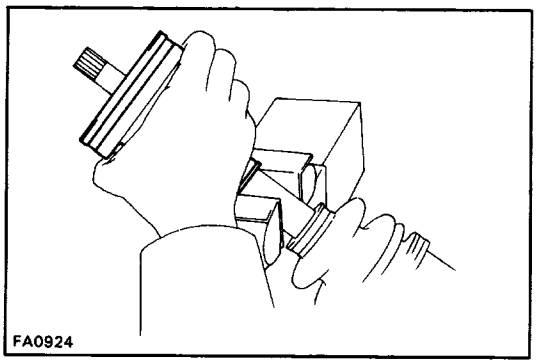

5. REMOVE INBOARD JOINT BOOT

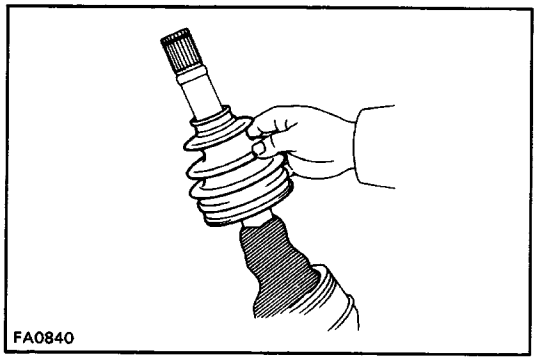

6. REMOVE OUTBOARD JOINT BOOT CLAMPS AND BOOT

NOTICE: Do not disassemble the outboard joint.

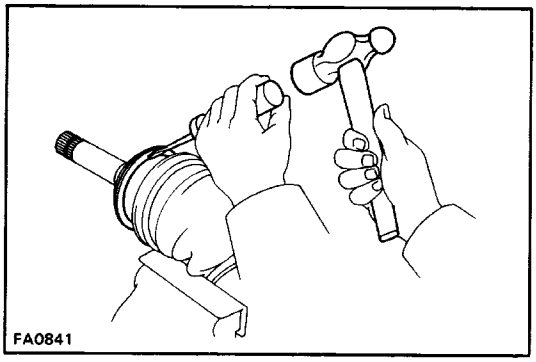

7. REMOVE DUST DEFLECTOR

Using a screwdriver and hammer, remove the dust de–flector.

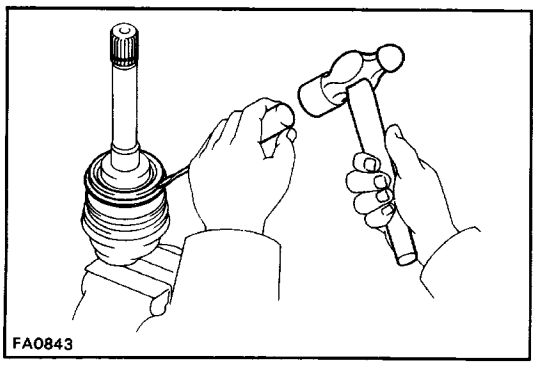

ASSEMBLY OF FRONT DRIVE SHAFT

(See page SA–46)

1. INSTALL DUST DEFLECTOR

Using a hammer and screwdriver, install a new dust de–flector.

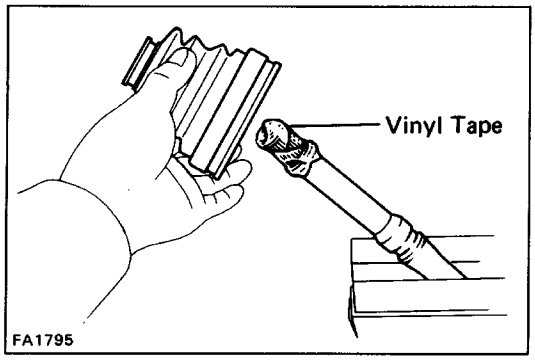

2. TEMPORARILY INSTALL BOOT AND NEW BOOT CLAMPS TO OUTBOARD JOINT

HINT: Before installing the boot, wrap vinyl tape around the spline of the shaft to prevent damaging the boot.

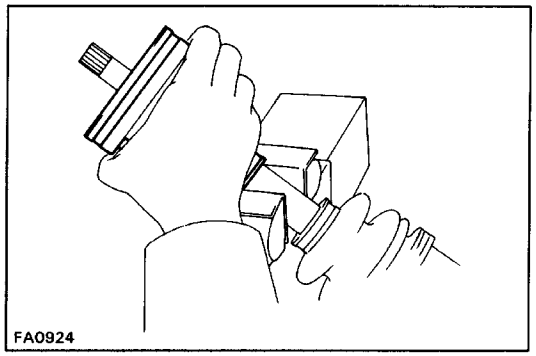

3. TEMPORARILY INSTALL BOOT AND NEW BOOT CLAMPS FOR INBOARD JOINT TO DRIVE SHAFT

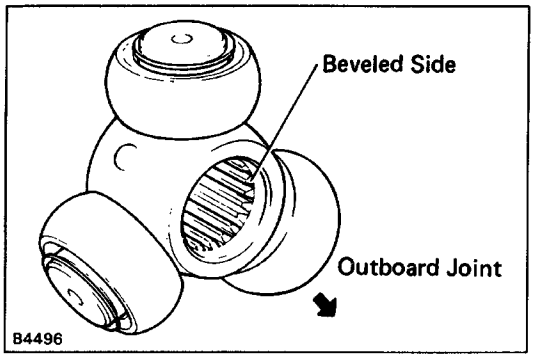

4. ASSEMBLE TRIPOD JOINT

(a) Place the beveled side of the tripod axial spline toward the outboard joint.

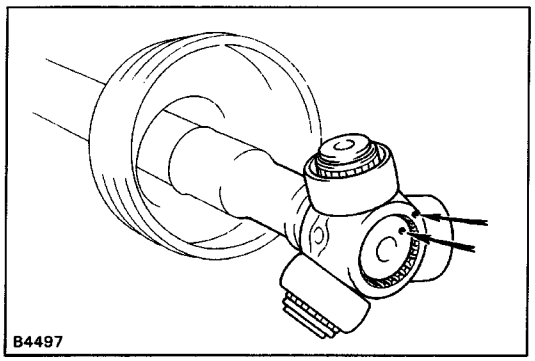

(b) Align the matchmarks placed before disassembly.

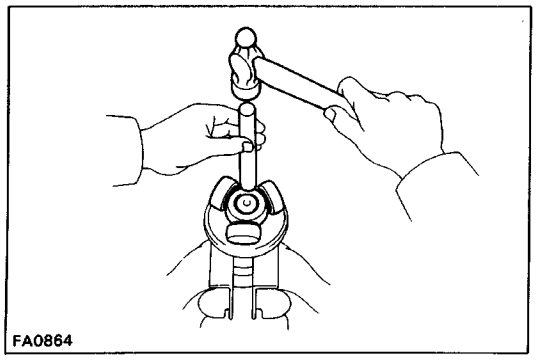

(e) Using a brass bar and hammer, tap in the tripod joint to the drive shaft.

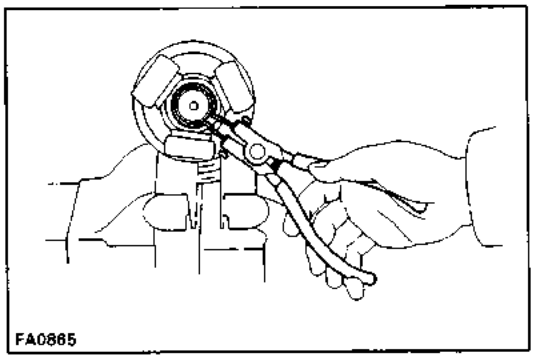

(d) Using a snap ring expander, install a new snap ring.

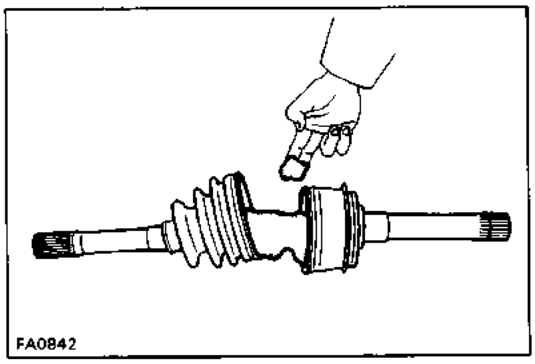

5. ASSEMBLE BOOT TO OUTBOARD JOINT

Before assembling the boot, pack in grease.

HINT: Use the grease (black) supplied in the boot kit.

Grease capacity: 195 – 205 g (0.43 – 0.45 lb)

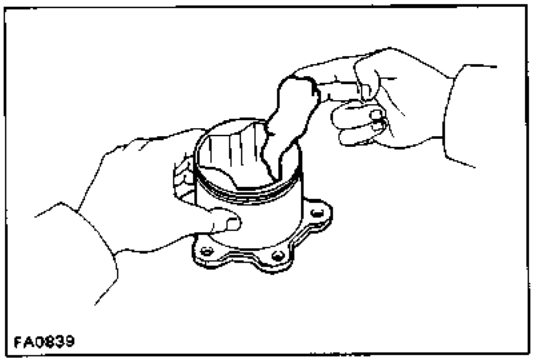

6. ASSEMBLE INBOARD JOINT TO INBOARD JOINT TULIP

(a) Pack in grease to the inboard tulip and boot.

HINT: Use the grease (brown) supplied in the boot kit.

Grease capacity: 270 – 280 g (0.60 – 0.62 lb)

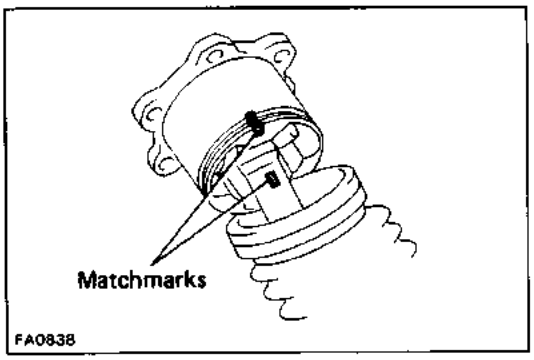

(b) Align the matchmarks placed before disassembly.

(c) Install the inboard tulip to the drive shaft.

(d) Temporarily install the boot to the inboard tulip.

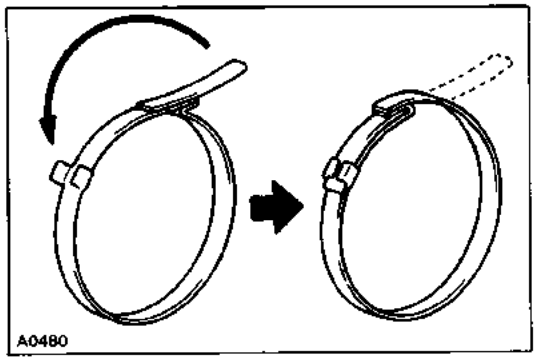

7. ASSEMBLE NEW BOOT CLAMPS TO BOTH BOOTS

(a) Be sure the boot is on the shaft groove.

(b) Bend the band and lock it as shown in the figure.

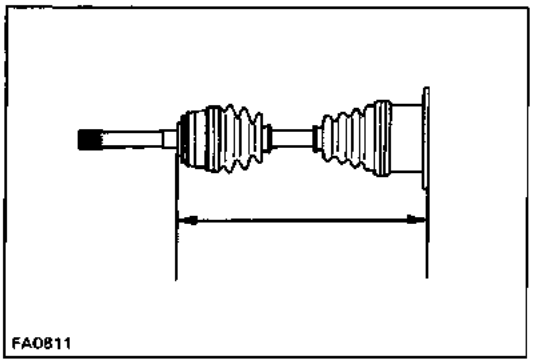

(c) Insure that the boot is not stretched or contracted when the drive shaft is at standard length.
Standard length:
393.9 – 403.9 mm (15.508 – 15.902 in.)

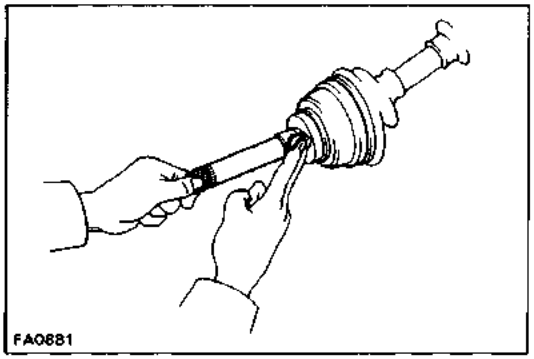

INSTALLATION OF FRONT DRIVE SHAFT

(See page SA–46)

1. APPLY MOLYBDENUM DISULPHIDE LITHIUM BASE GREASE

Apply molibdenum disulphide lithium base grease to the outboard joint shaft.

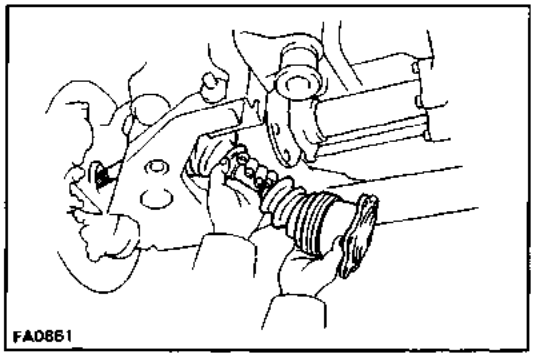

2. INSTALL FRONT DRIVE SHAFT

(a) First insert the outboard joint shaft to the steering knuckle, and then install it to the side gear shaft.
HINT: Do not damage the boots.

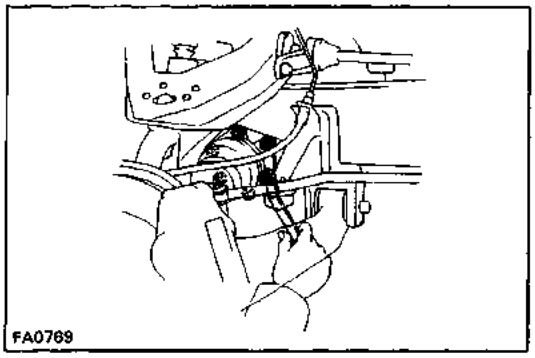

(b) Temporarily install the six nuts.

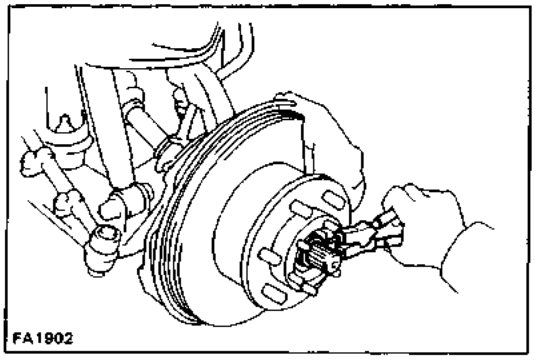

3. INSTALL SPACER AND SNAP RING

Install the spacer, and using a snap ring expander, install the snap ring to the outboard joint shaft.

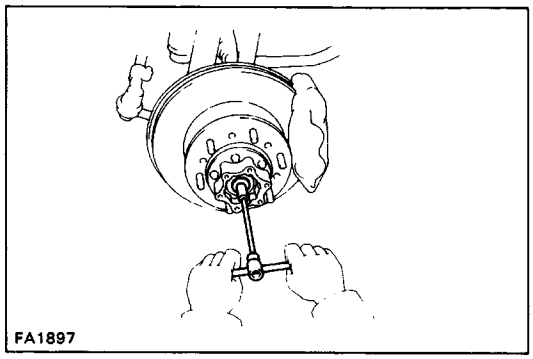

4. INSTALL FREE WHEELING HUB OR FLANGE

(Free wheeling hub See page SA–33)
(Flange See page SA–39)

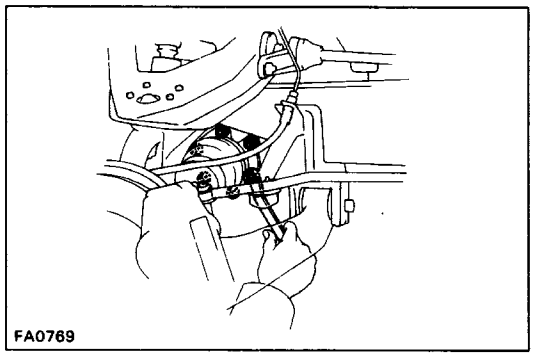

5. TORQUE FRONT DRIVE SHAFT INSTALLATION NUTS

Torque the six nuts, while depressing the brake pedal.
Torque: 83 N–m (845 kgf–cm, 61 ft–lbf)

FRONT DIFFERENTIAL

On–Vehicle Replacement of Rear Oil Seal

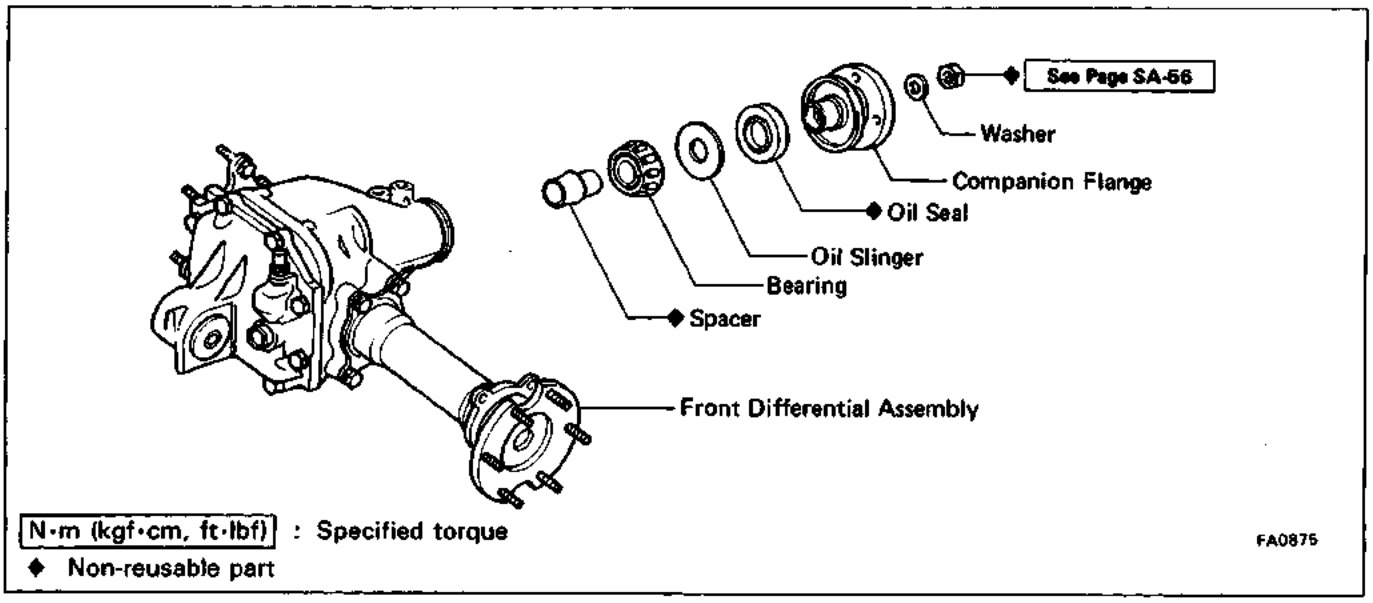

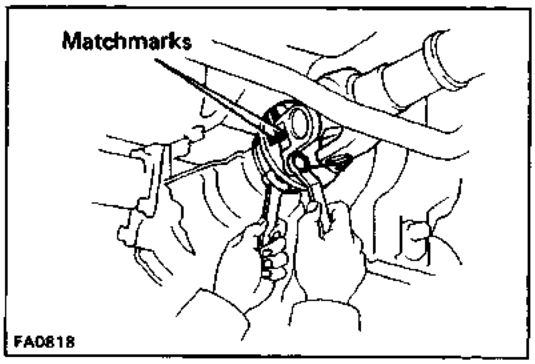

1. DRAIN DIFFERENTIAL OIL

2. DISCONNECT PROPELLER SHAFT

Before disconnecting the propeller shaft from the front differential, place matchmarks on them.

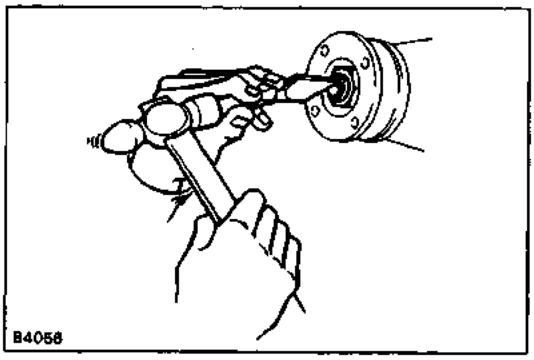

3. REMOVE COMPANION FLANGE

(a) Using a hammer and chisel, loosen the staked part of the nut.

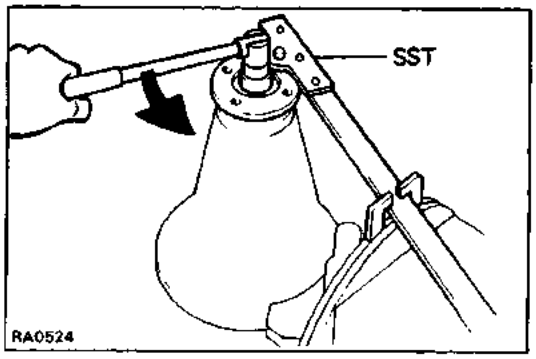

(b) Using SST to hold the flange, remove the nut and washer.
SST 09330–00021

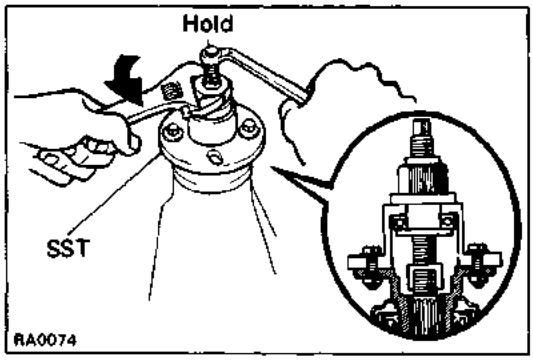

(c) Using SST, remove the companion flange.
SST 09557–22022 (09557–22030)

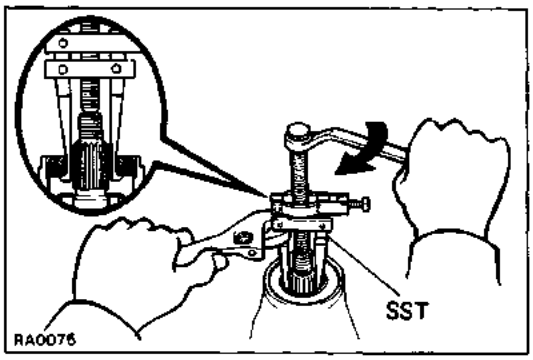

4. REMOVE OIL SEAL AND OIL SLINGER

(a) Using SST, remove the oil seal.
SST 09308–10010

(b) Remove the oil slinger.

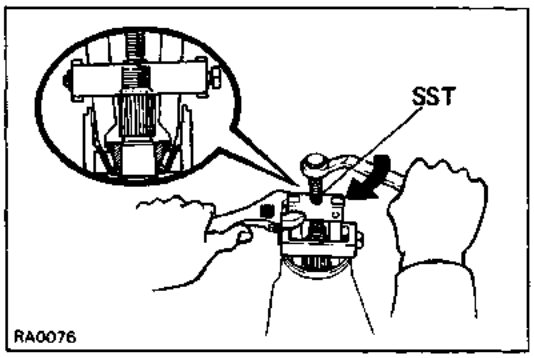

5. REMOVE REAR BEARING AND BEARING SPACER

(a) Using SST, remove the rear bearing from the drive pinion.
SST 09556–30010

(b) Remove the bearing spacer.

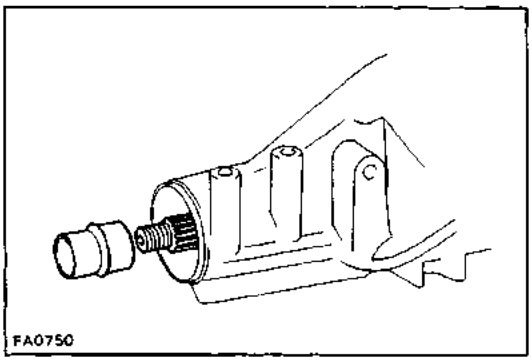

6. INSTALL NEW BEARING SPACER AND REAR BEARING

(a) Install a new bearing spacer on the drive pinion.

(b) Install the rear bearing on the drive pinion.

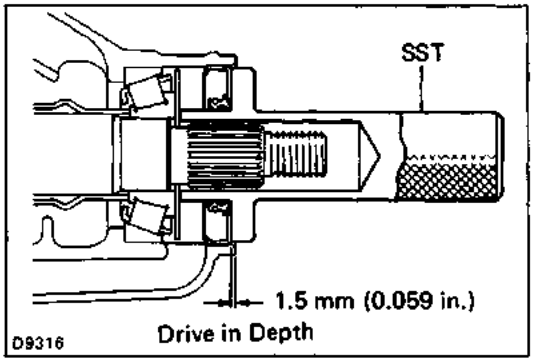

7. INSTALL OIL SLINGER AND NEW OIL SEAL

(a) Install the oil slinger.

(b) Using SST, drive in a new oil seal.
SST 09554–30011
Oil seal drive in depth: 1.5 mm (0.059 in.)

(c) Apply MP grease to the oil seal lip.

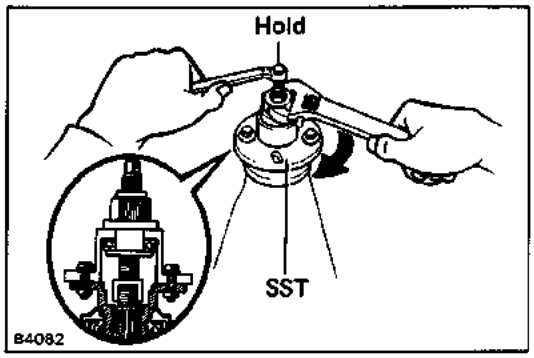

8. INSTALL COMPANION FLANGE

(a) Using SST, install the companion flange on the drive pinion.
SST 09557–22022 (09557–22030)

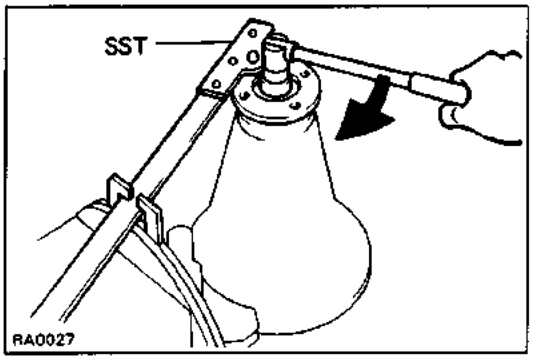

(b) Coat the threads of the new nut with MP grease.

(c) Using SST to hold the flange, torque the nut.
SST 09330–00021
Torque: 120 N–m (1,225 kgf–cm, 89 ft–lbf)

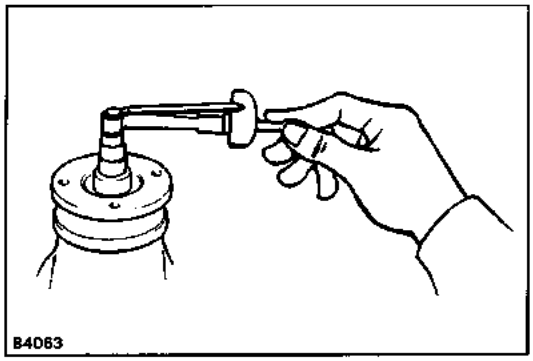

9. ADJUST DRIVE PINION BEARING PRELOAD

Using a torque meter, measure the preload of the back–lash between the drive pinion and ring gear.

Preload (starting):

New bearing

1.2 – 1.9 N–m

(12 – 19 kgf–cm, 10.4 – 16.5 in.–lbf)

Reused bearing

0.6 – 1.0 N–m

(6 – 10 kgf–cm, 5.2 – 8.7 in.–lbf)

(a) If the preload is greater than specification, replace the bearing spacer.

(b) If the preload is less than specification, retighten the nut 13 N–m (130 kgf–cm, 9 ft–lbf) a little at a time until the specified preload is reached.
Maximum torque: 223 N–m (2,275 kgf–cm, 165 ft–lbf)
If the maximum torque is exceeded while retightening the nut, replace the bearing spacer and repeat the preload procedure. Do not back off the pinion nut to reduce the preload.

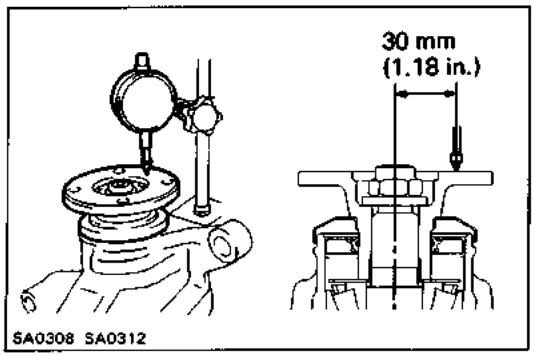

10. CHECK RUNOUT OF COMPANION FLANGE

Using a dial indicator, measure the vertical and lateral runout of the companion flange.
Maximum vertical runout: 0.10 mm (0.0039 in.)

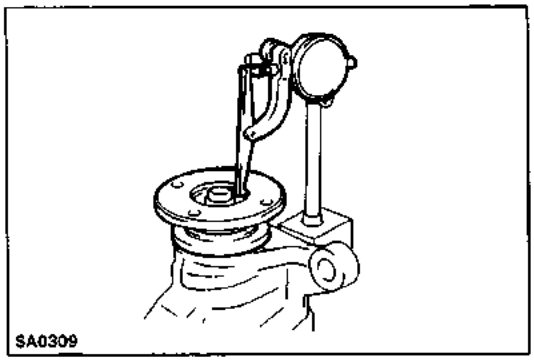

Maximum lateral runout: 0.10 mm(0.0039 in.)

If the runout is greater than maximum, inspect the bearings.

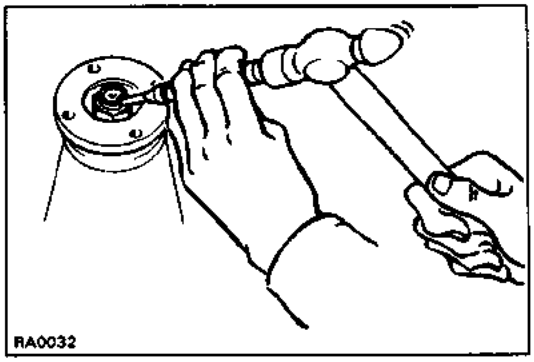

11. STAKE DRIVE PINION NUT

12. INSTALL DRAIN PLUG AND FILL DIFFERENTIAL WITH GEAR OIL

(w/ A.D.D.)

Oil type: Toyota "GEAR OIL SUPER" oil (Part No. 08885 – 02106) or hypoid gear oil API GL–5

Recommended oil viscosity: SAE 75W–90

Capacity: 1.86 liters (1.97 US qts, 1.64 Imp. qts)

(w/o A.D.D.)

Oil type: Hypoid gear oil API GL–5

Recommended oil viscosity:

Above – 18°C (O°F) SAE 90

Below – 18 ° C (0 ° F) SAE 80W or 80W–90

Capacity: 1.6 liters (1.7 US qts, 1.4 Imp. qts)

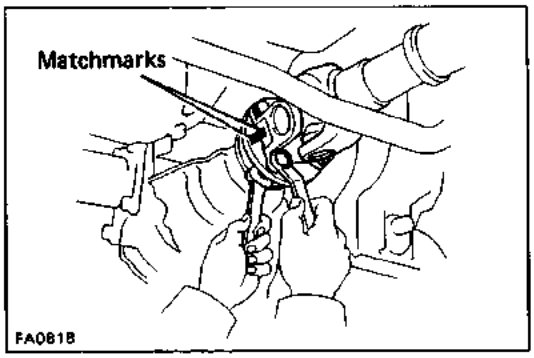

13. CONNECT PROPELLER SHAFT TO COMPANION FLANGE

(a) Align the matchmarks and connect the propeller shaft to the companion flange with four bolts anc nuts.

(b) Torque the nuts.

Torque: 74 N–m (750 kgf–cm, 54 ft–lbf)

Removal of Front Differential

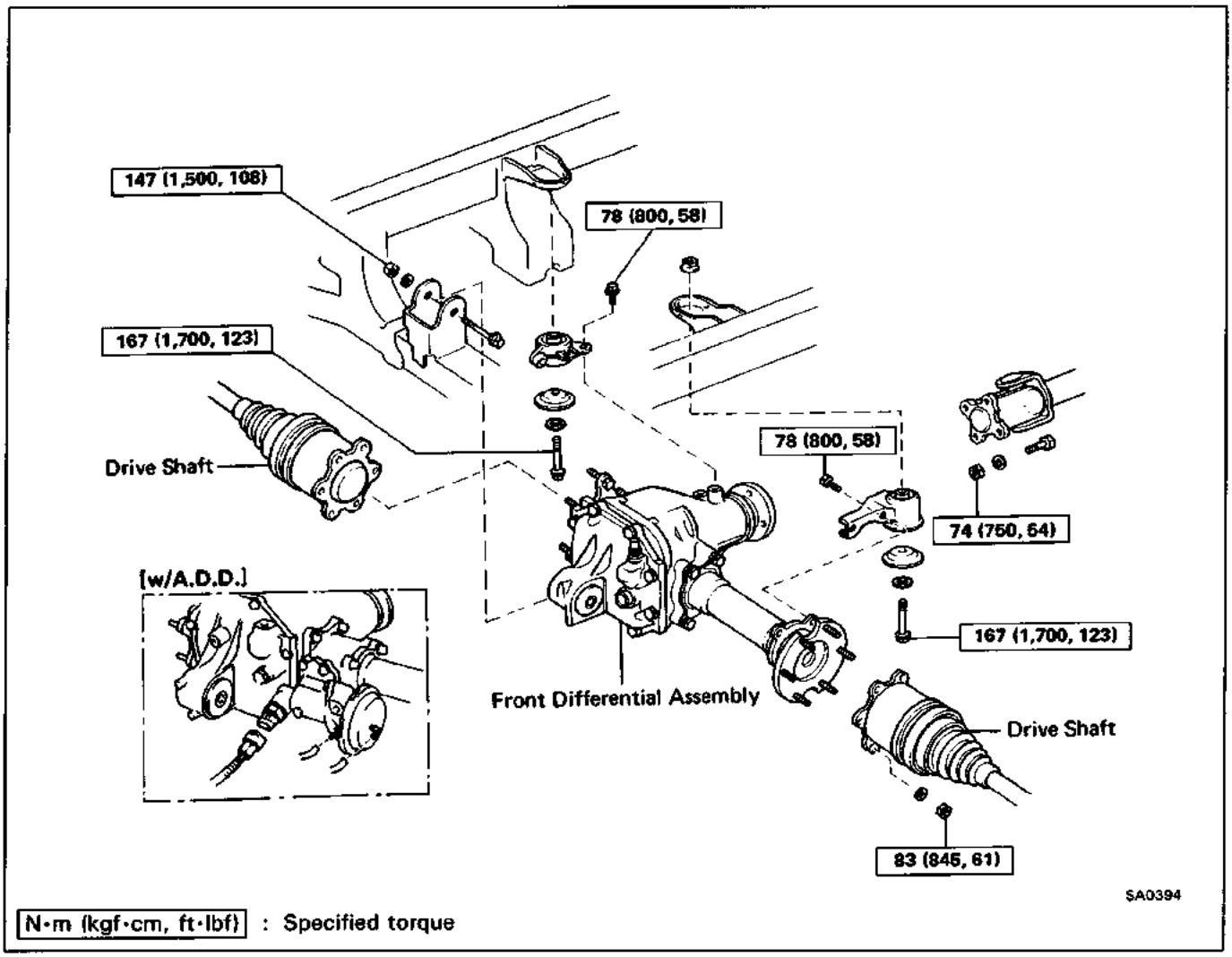

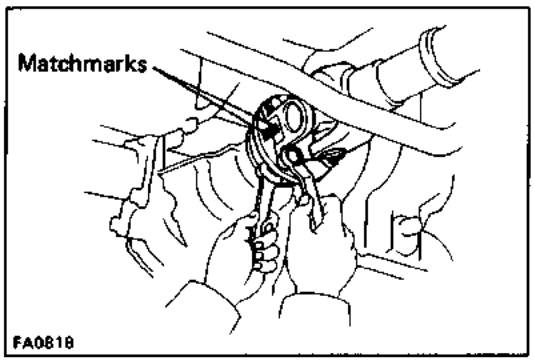

1. DRAIN DIFFERENTIAL OIL

2. DISCONNECT PROPELLER SHAFT

Before disconnecting the propeller shaft, place match–marks.

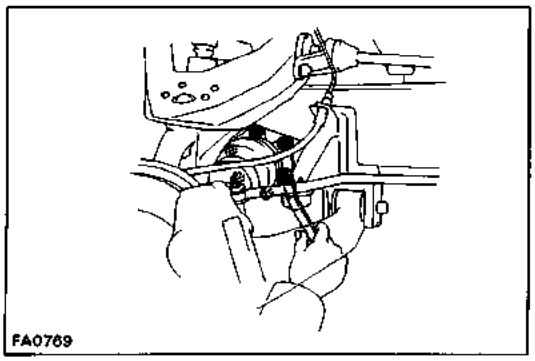

3. DISCONNECT DRIVE SHAFTS FROM SIDE GEAR SHAFT

Loosen the six nuts, while depressing the brake pedal, and disconnect the drive shafts from the side gear shaft.

4. (w/ A.D.D.)

DISCONNECT VACUUM HOSES AND 4WD INDICATOR SWITCH CONNECTOR

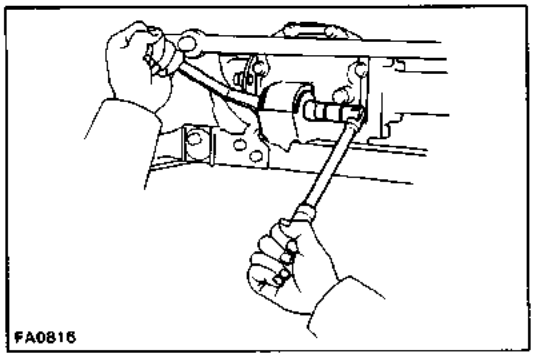

5. REMOVE FRONT DIFFERENTIAL FRONT MOUNTING BOLT AND NUT

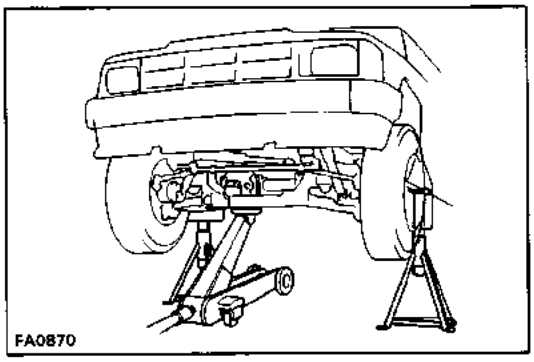

6. REMOVE FRONT DIFFERENTIAL

(a) Hold the front differential with a jack.

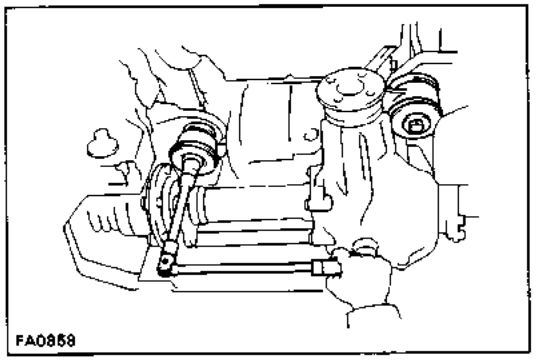

(b) Remove the left and right rear mounting bolts, and remove the front differential.

Replacement of Side Oil Seal (without A.D.D.)

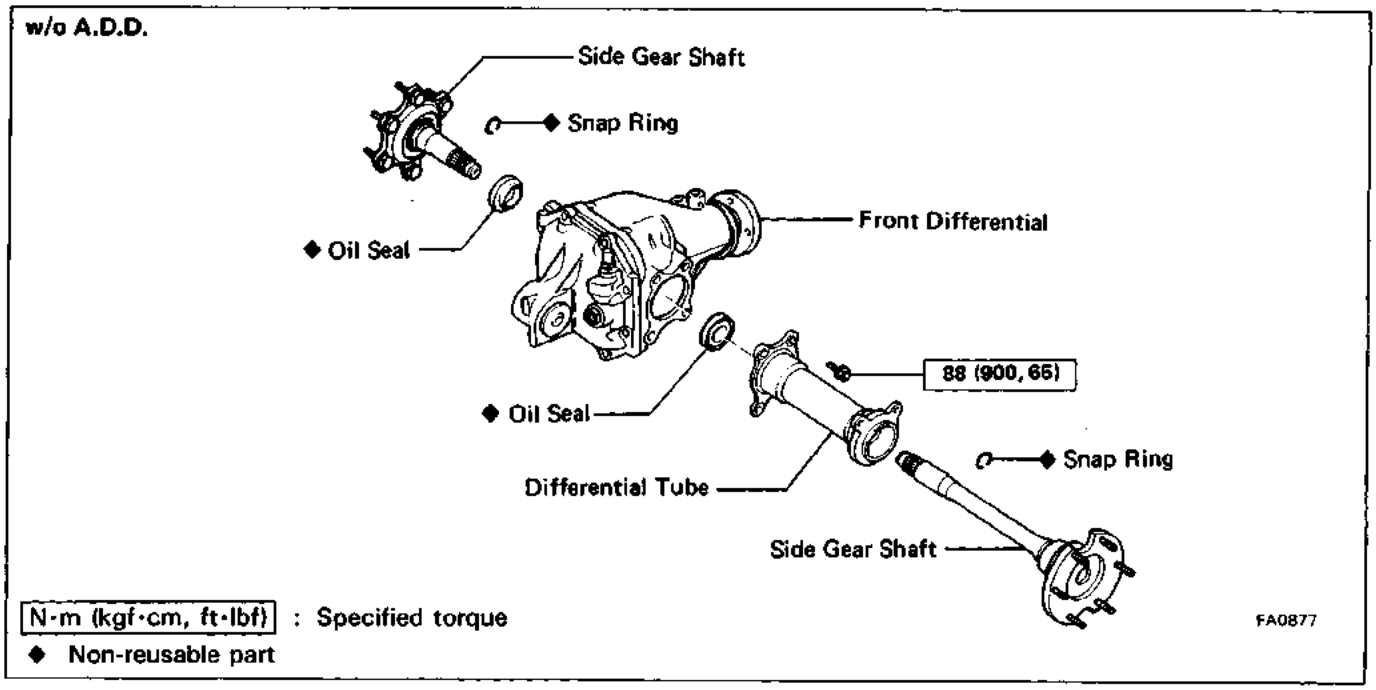

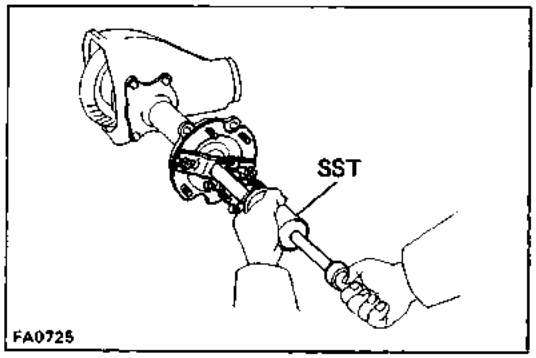

1. REMOVE SIDE GEAR SHAFT

Using SST, pull off the side gear shaft from the front differential.

SST 09910–00015
(09911–00011, 09912–00010, 09914–00011)

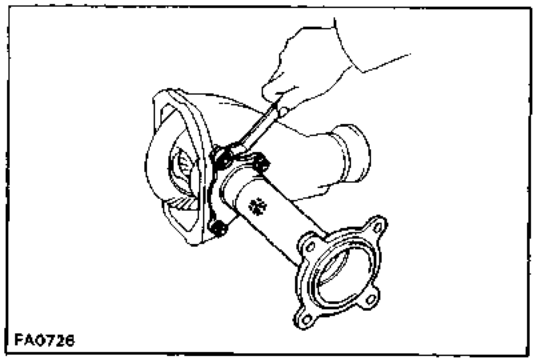

2. REMOVE FRONT DIFFERENTIAL TUBE

Remove the four bolts, and using a plastic–faced hammer, remove the differential tube.

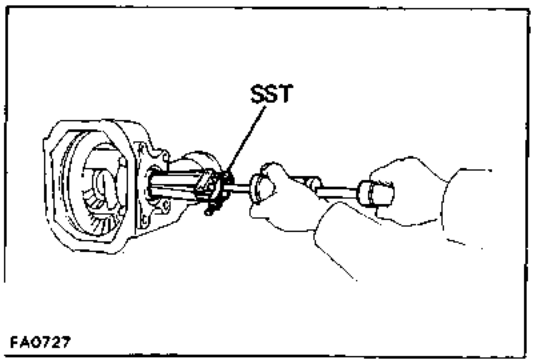

3. REMOVE SIDE GEAR SHAFT OIL SEAL

Using SST, remove the side gear shaft oil seal.

SST 09308–00010

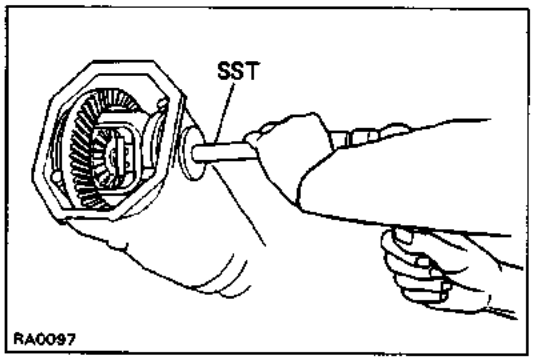

4. INSTALL NEW SIDE GEAR SHAFT OIL SEAL

(a) Using SST, drive in the oil seal until it is flush with the carrier end surface.
SST 09550–22011 (09550–00020, 09550–00031)

(b) Coat the lip of oil seal with MP grease.

5. INSTALL DIFFERENTIAL TUBE

Torque: 88 N–m (900 kgf–cm, 65 ft–lbf)

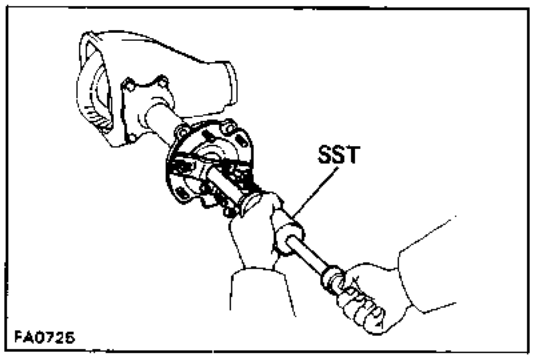

6. INSTALL SIDE GEAR SHAFT

(a) Install a new snap ring to the side gear shaft.

(b) Using SST, install the side gear shaft until it contacts the pinion shaft.
SST 09910–00015
(09911–00011, 09912–00010, 09914–00011)

7. CHECK INSTALLATION OF SIDE GEAR SHAFT

(a) Check that there is 2 – 3 mm (0.08 – 0.12 in.) of play in axial direction.

(b) Check that the side gear shaft will not come out by trying to pull it completely out by hand.

Replacement of Side Oil Seal (with A.D.D.)

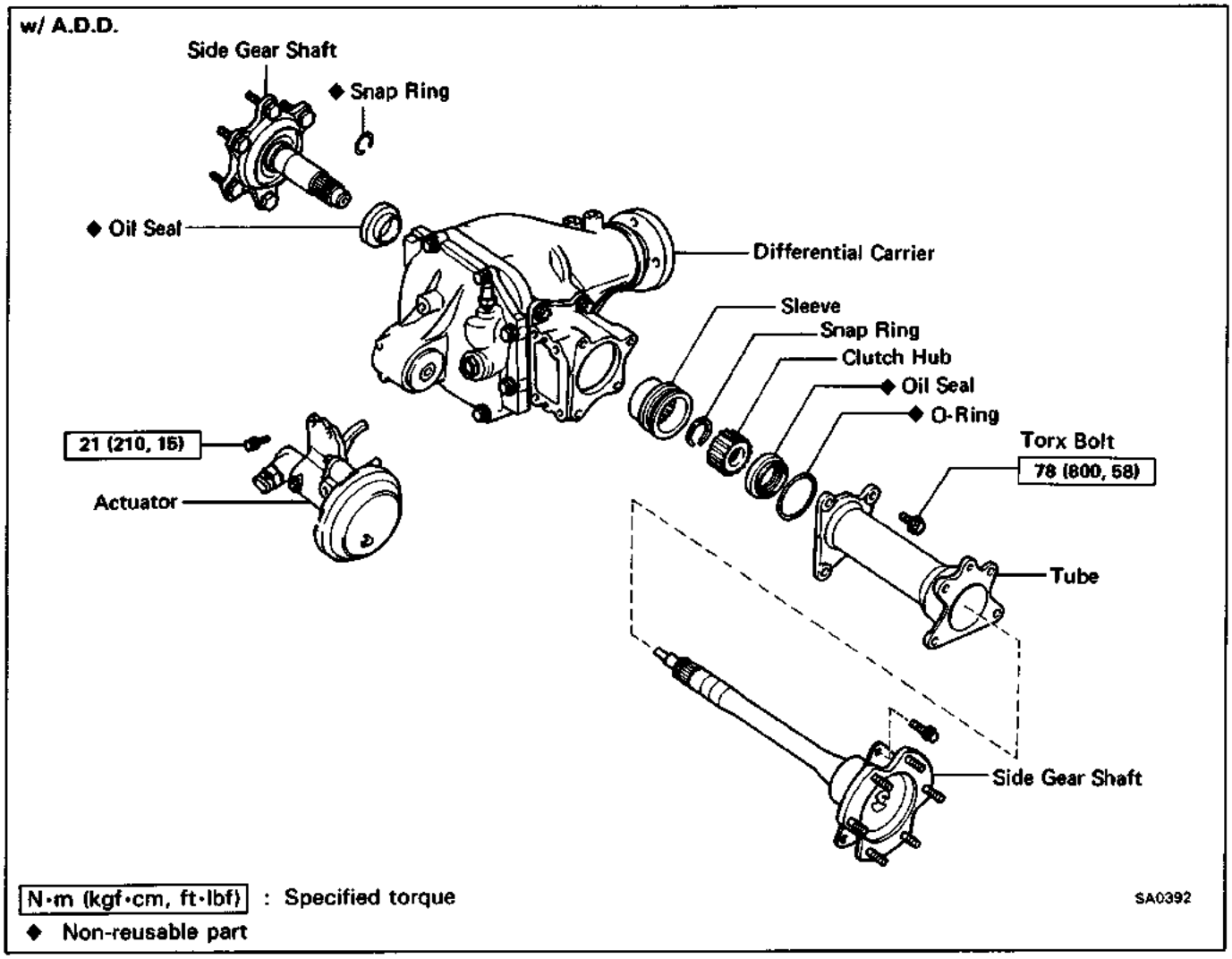

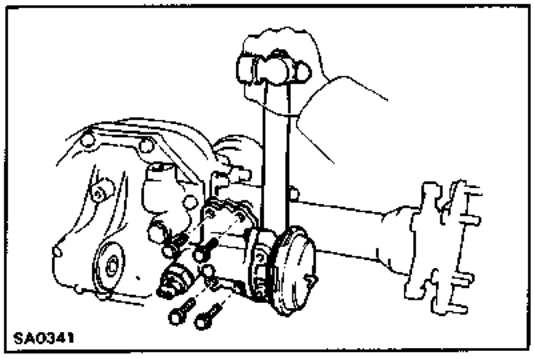

REPLACEMENT OF LH SIDE OIL SEAL

1. REMOVE ACTUATOR

(a) Remove the four bolts.

(b) Using a hammer, remove the actuator.

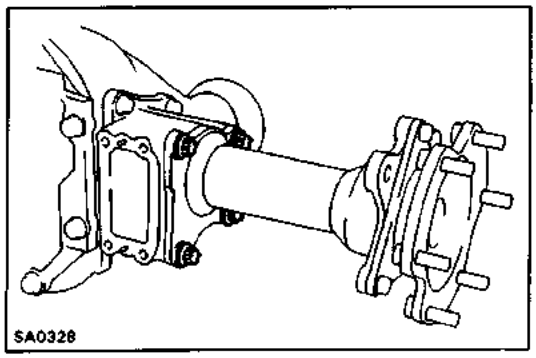

2. REMOVE LH SIDE GEAR SHAFT WITH TUBE

(a) Remove the four torx bolts.

Torx wrench: E 14 (part No. 09044–00010 or locally manufactured tool)

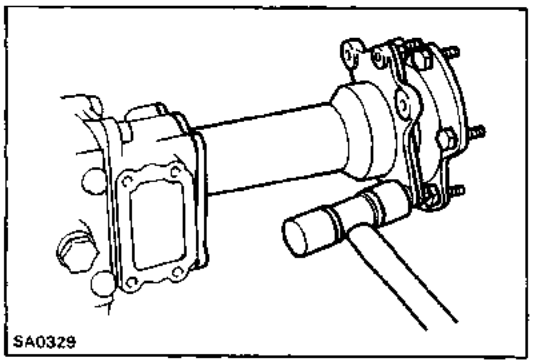

(b) Using a plastic–faced hammer, tap on the tube to remove it.

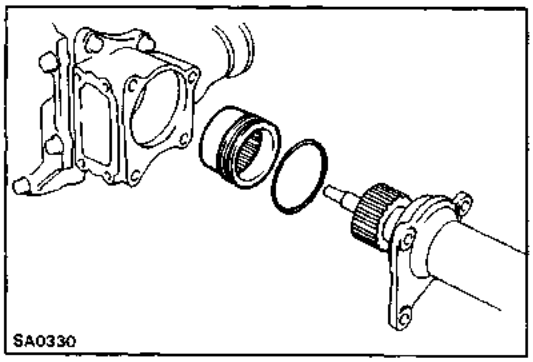

(c) Remove the sleeve.
(d) Remove the O–ring from the tube.

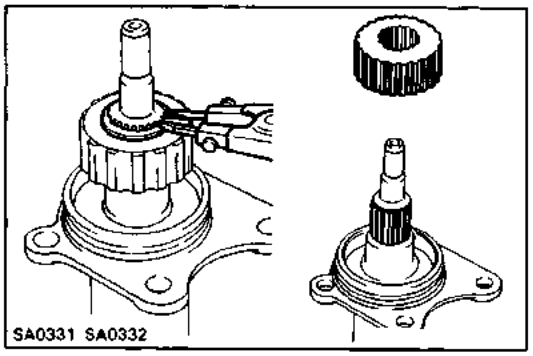

3. REMOVE CLUTCH HUB

(a) Using a snap ring expander, remove the snap ring.
(b) Remove the clutch hub from the side gear shaft.

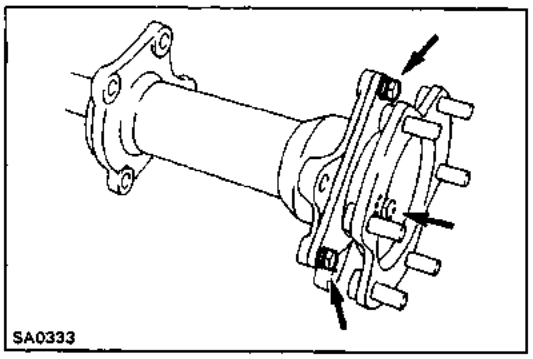

4. REMOVE SIDE GEAR SHAFT FROM TUBE

(a) Remove the three bearing retainer bolts.
(b) Remove the side gear shaft from the tube.

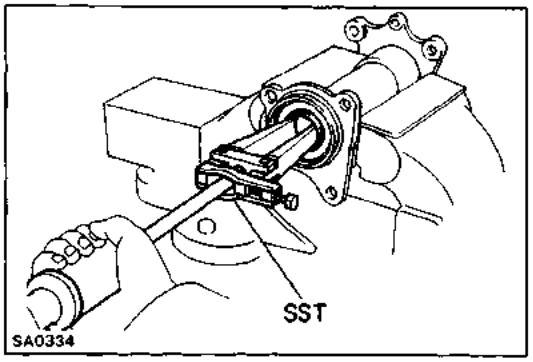

5. REPLACE SIDE OIL SEAL

(a) Using SST, remove the side oil seal.
SST 09308–00010

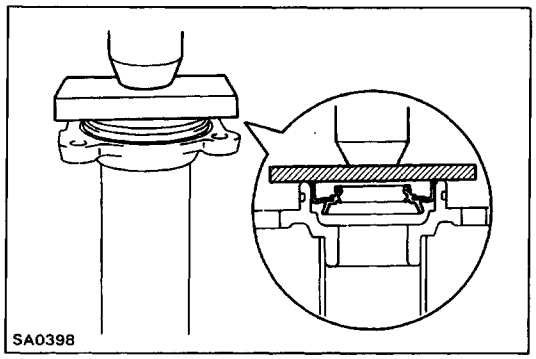

(b) With the oil seal lip facing upward, use press and plate to press in a new side oil seal until its end is flush with the surface of the tube.

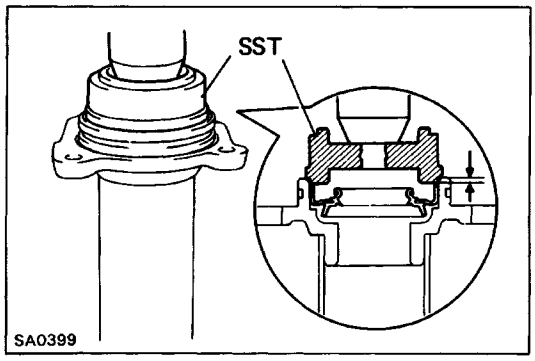

(c) Using SST, press in the oil seal.
SST 09554–14010
Press in depth: 2.5 mm (0.098 in.)

(d) Coat the lip of oil seal with IMP grease.

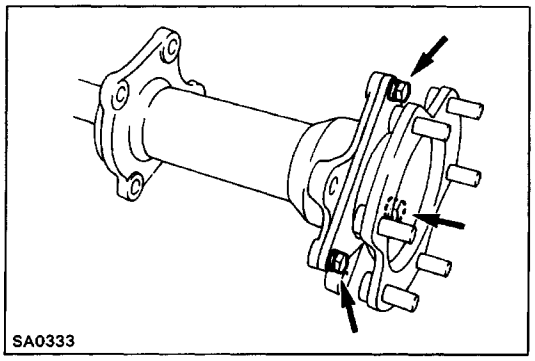

6. INSTALL SIDE GEAR SHAFT

(a) Install the side gear shaft to the tube.

(b) Tighten the three bearing retainer bolts.

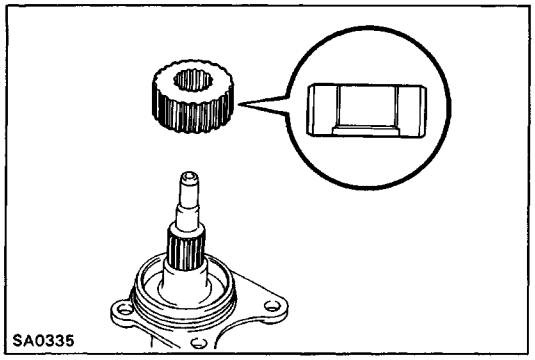

7. INSTALL CLUTCH HUB

(a) Install the clutch hub to the shaft.

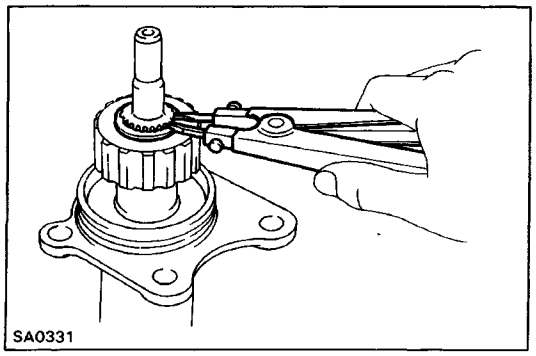

(b) Using a snap ring expander, install the snap ring.

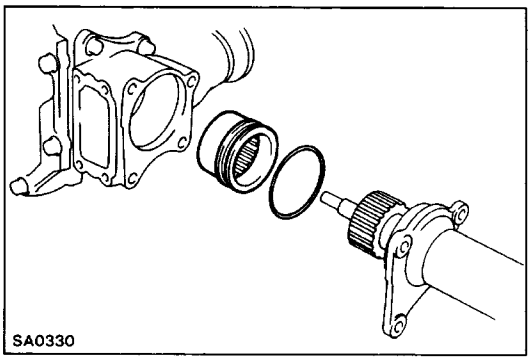

8. INSTALL SIDE GEAR SHAFT WITH TUBE TO DIFFERENTIAL CARRIER

(a) Install a new 4–ring to the tube.

(b) Install the sleeve onto the clutch hub.

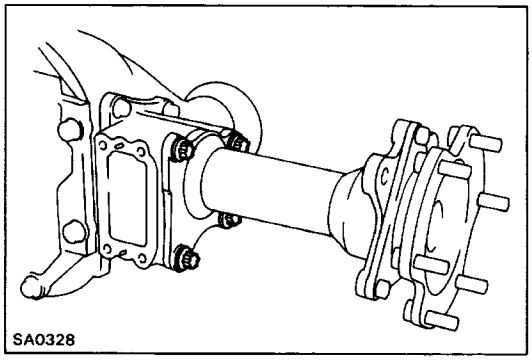

(c) Install the side gear shaft with tube.

(d) Tighten the four torx bolts.

Torque: 78 N–m (800 kgf–cm, 58 ft–lbf)

Torx wrench: E14 (Part No. 09044–00010 or locally manufactured tool)

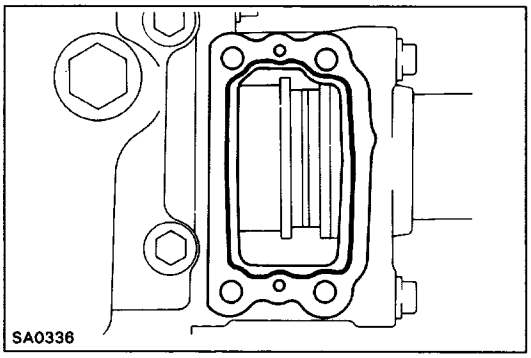

9. INSTALL ACTUATOR

(a) Remove any packing material and be careful not to get oil on the contacting surfaces of the actuator and clutch case.

(b) Apply seal packing to the clutch case as shown.

Seal packing: Part No. 08826–00090, THREE BOND 1281 or equivalent

HINT: Install the actuator within ten minutes after ap–plying seal packing.

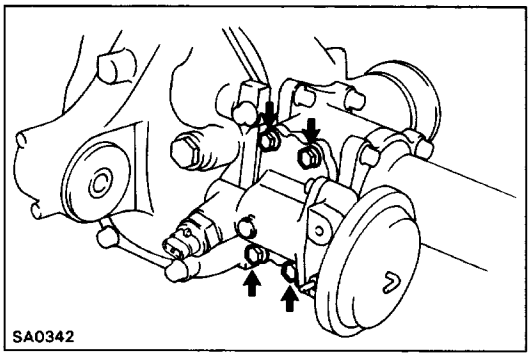

(c) Tighten the four bolts.

Torque: 21 N–m (210 kgf–cm, 15 ft–lbf)

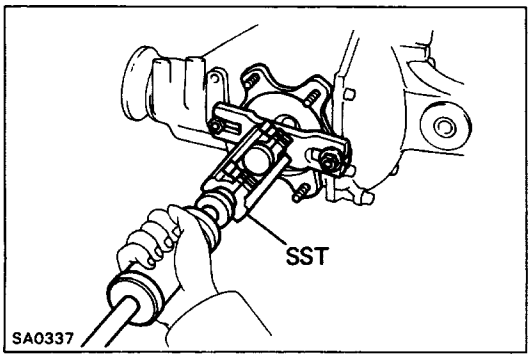

REPLACEMENT OF RH SIDE OIL SEAL

1. REMOVE RH SIDE GEAR SHAFT

Using SST, pull off the RH side gear shaft from differen–tial carrier.

SST 09910–00015
(09911–00011, 09912–00010, 09914–00011)

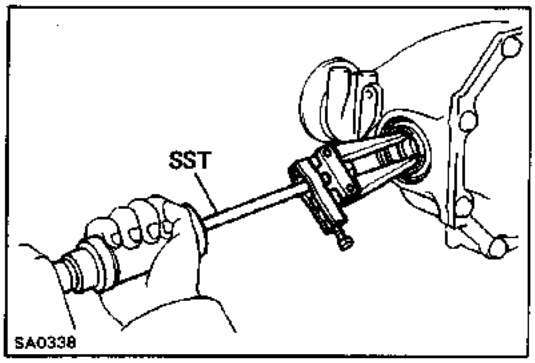

2. REPLACE SIDE OIL SEAL

(a) Using SST, remove the oil seal.
SST 09308–00010

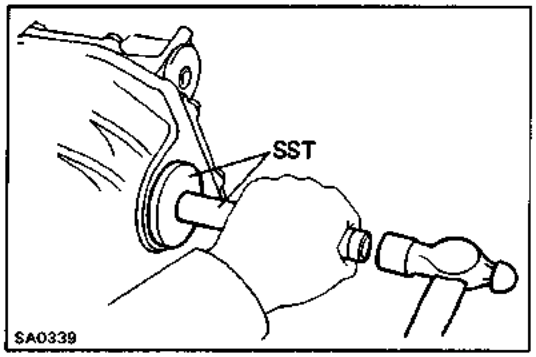

(b) Using SST, install the new oil seal.
SST 09550–22011 (09550–00020, 09550–0003)

(c) Coat the lip of oil seal with MP grease.

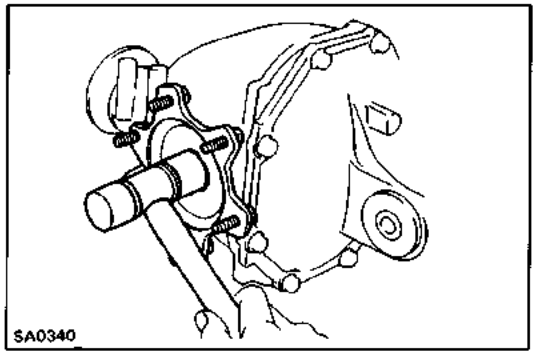

3. INSTALL RH SIDE GEAR SHAFT

(a) Install a new snap ring to the side gear shaft.

(b) Using a plastic–faced hammer, tap on the side gear shaft to install it.

4. CHECK INSTALLATION OF SIDE GEAR SHAFT

(a) Check that there is 2 – 3 mm (0.08 – 0.12 in.) of play in axial direction.

(b) Check that the side gear shaft will not come out by trying to pull it completely out by hand.

Disassembly and Assembly of Differential (with out A.D.D.)

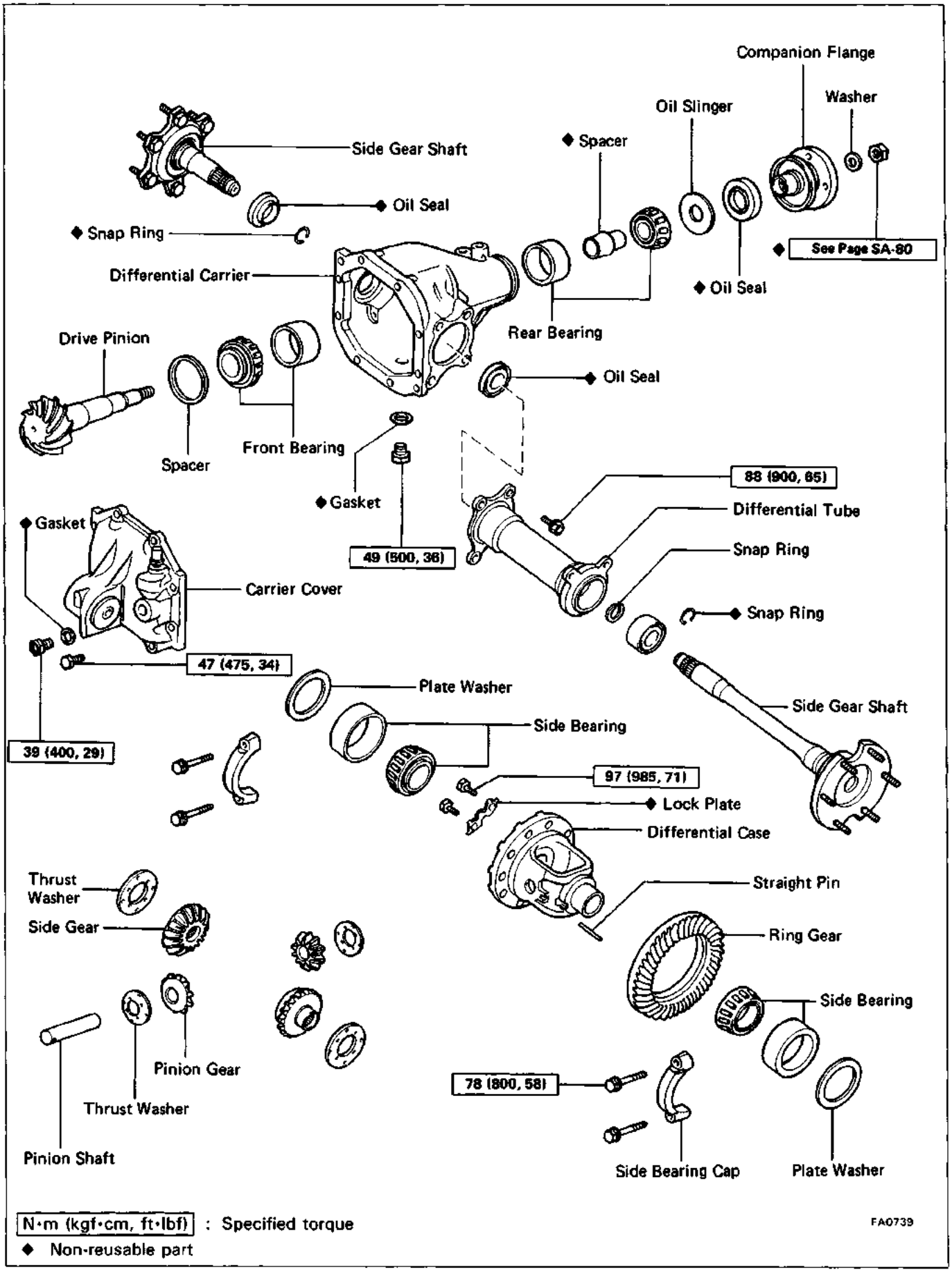

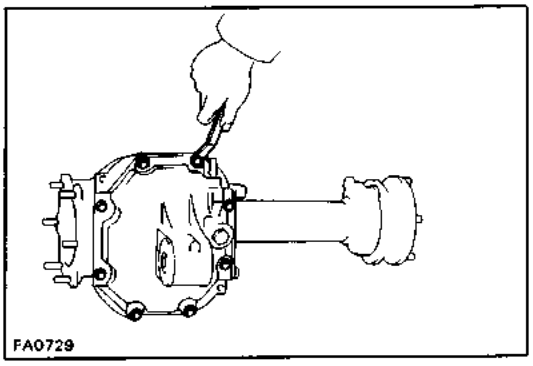

DISASSEMBLY OF DIFFERENTIAL

1. REMOVE DIFFERENTIAL COVER

Remove the eight bolts and tap off the cover with a plastic–faced hammer.

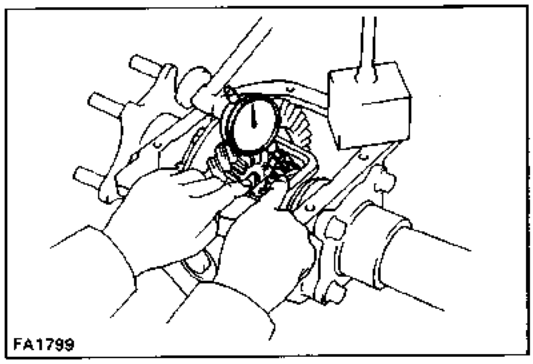

2. CHECK SIDE GEAR BACKLASH

Measure the side gear backlash while holding one pinion gear toward the case.

Standard backlash: 0.05 – 0.20 mm
(0.0020 – 0.0079 in.)

If the backlash is out of specification, install the correct thrust washers. (See page SA–71)

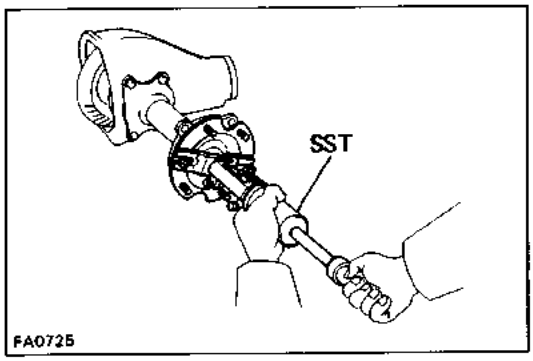

3. REMOVE SIDE GEAR SHAFTS

Using SST, remove the side gear shafts from the differential.

SST 09910–00015 .
(09911–00011, 09912–00010, 09914–00011)

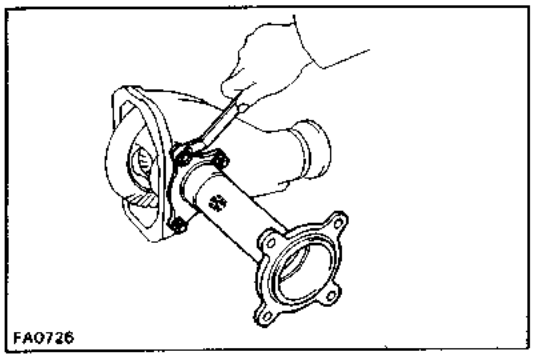

4. REMOVE DIFFERENTIAL TUBE

Remove the four bolts and tap off the cover with a plastic–faced hammer.

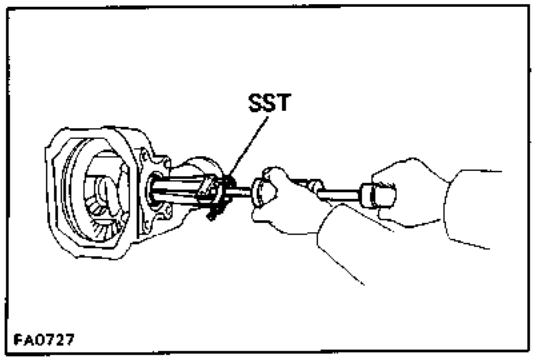

5. REMOVE SIDE GEAR SHAFT OIL SEALS

Using SST, remove the oil seals.

SST 09308–00010

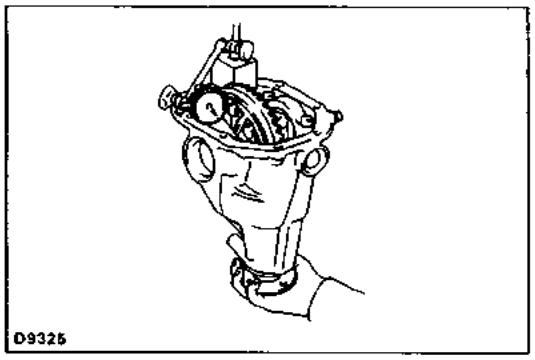

6. CHECK RING GEAR RUNOUT

Using a dial indicator, measure the ring gear runout.

Maximum runout: 0.07 mm (0.0028 in.)

If the runout is greater than maximum, replace the ring gear and drive pinion as a set.

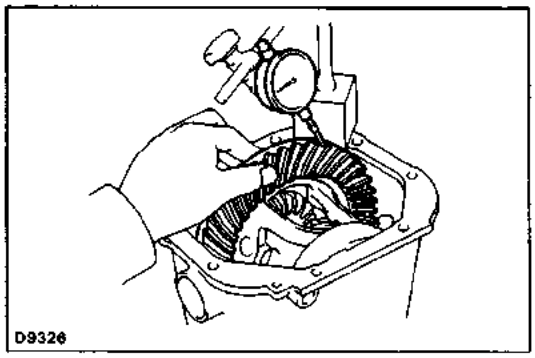

7. CHECK RING GEAR BACKLASH

(a) Fix the dial indicator on the tooth surface at a 90° angle.

(b) Holding the drive pinion flange, measure the ring gear backlash.

Ring gear backlash: 0.13 – 0.18 mm (0.0051 – 0.0071 in.)

If the backlash is not within specification, adjust the ring gear backlash.

HINT: Measure from three or more places on the cir–cumference of the ring gear.

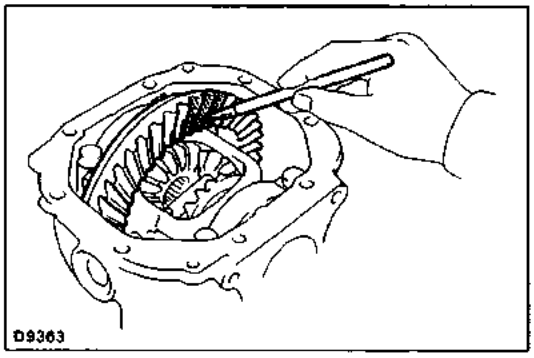

8. INSPECT TOOTH CONTACT BETWEEN RING GEAR AND DRIVE PINION (SEE STEP 7 ON PAGE SA–78)

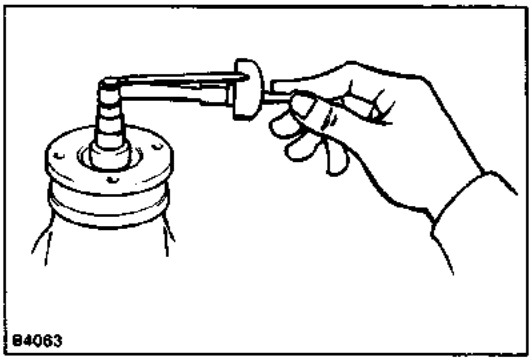

9. MEASURE DRIVE PINION PRELOAD

Using a torque gauge, measure the preload of the back–lash between the drive pinion and ring gear.

Preload (starting):

0.6 – 1.0 N–m (6 – 10 kgf–cm, 5.2 – 8.7 in.–lbf)

10. CHECK TOTAL PRELOAD

Using a torque gauge, measure the total preload.

Total preload (starting):

Add drive pinion preload

0.4 – 0.6 N–m

(4 – 6 kgf –cm, 3.5 – 5.2 in.–lbf)

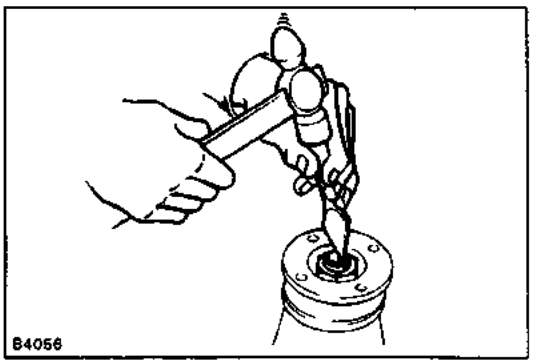

11. REMOVE COMPANION FLANGE

(a) Using a hammer and chisel, loosen the staked part of the nut.

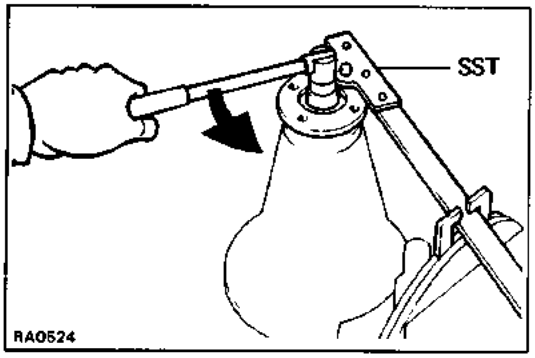

(b) Using SST to hold the flange, remove the nut.
SST 09330–00021

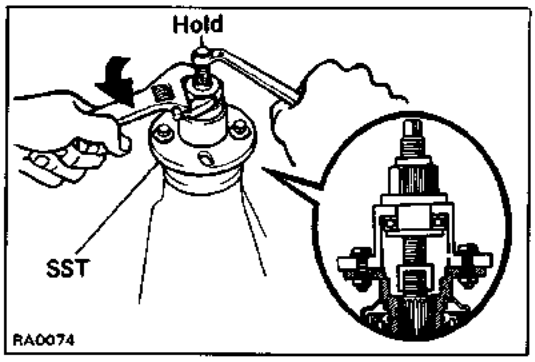

(c) Using SST, remove the companion flange.
SST 09557–22022 (09557–22030)

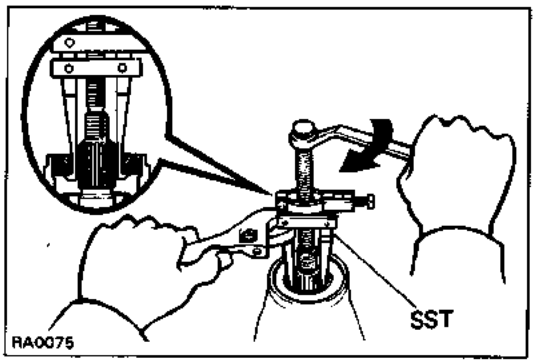

12. REMOVE OIL SEAL AND OIL SLINGER

(a) Using SST, remove the oil seal from the housing.
SST 09308–10010

(b) Remove the oil slinger.

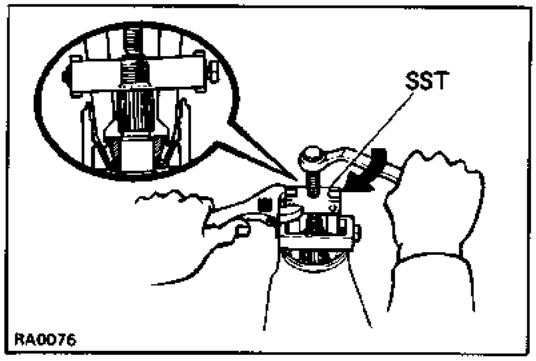

13. REMOVE REAR BEARING AND BEARING SPACER

(a) Using SST, remove the rear bearing from drive pinion.
SST 09556–30010

(b) Remove the bearing spacer.
If the rear bearing is damaged or worn, replace the bearing.

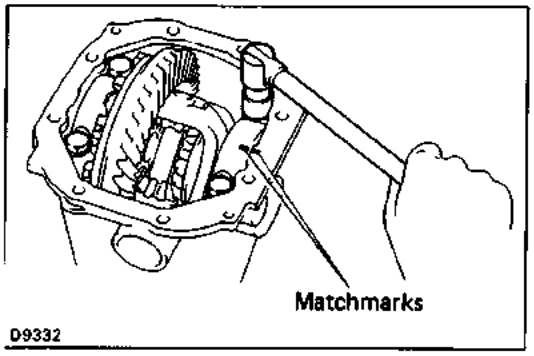

14. REMOVE DIFFERENTIAL CASE AND RING GEAR

(a) Place matchmarks on the bearing cap and differential carrier.

(b) Remove the two bearing caps.

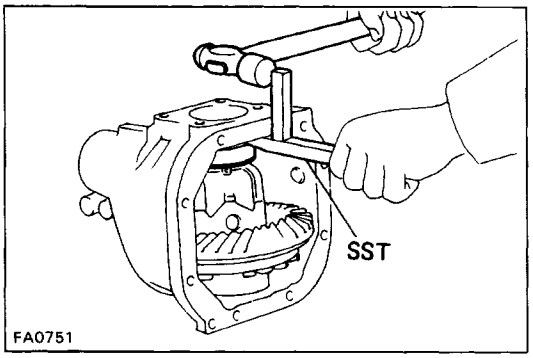

(c) Using SST and a hammer, remove the two side bearing preload adjusting plate washers.
SST 09504–22011

HINT: Measure the adjusting plate washer and note the thickness.

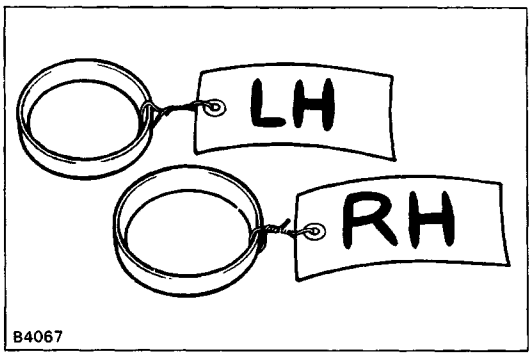

(d) Remove the differential case with bearing outer race from the carrier.
HINT: Tag the bearing outer races to show the location for reassembly.

15. REMOVE DRIVE PINION FROM DIFFERENTIAL CARRIER

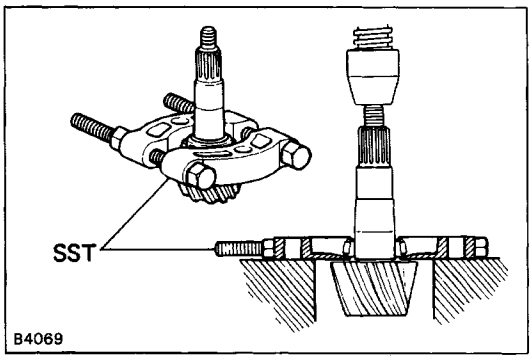

INSPECTION AND REPLACEMENT OF DIFFERENTIAL

1. REPLACE DRIVE PINION FRONT BEARING

4ay Using SST, press out the front bearing from the drive pinion.
SST 09950–00020
HINT: If the drive pinion or ring gear are damaged, re–place them as a set.

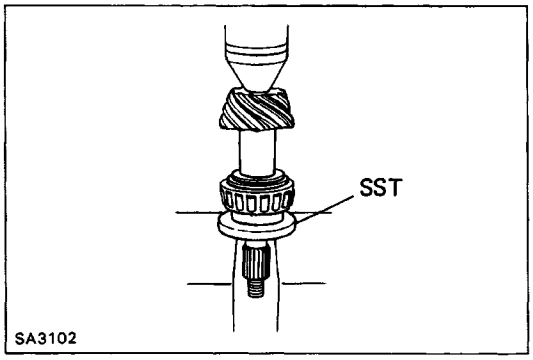

(b) Install the washer on the drive pinion.
(c) Using SST, press in the front bearing onto the drive pinion.
SST 09506–30012

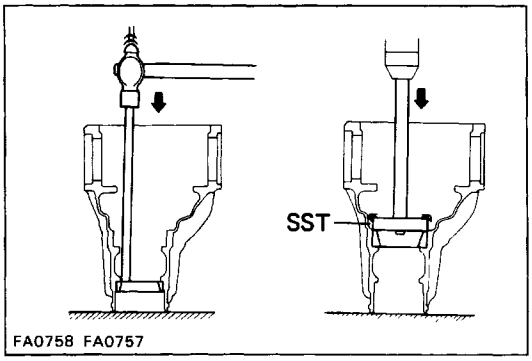

2. REPLACE DRIVE PINION FRONT AND REAR BEARING OUTER RACES

(a) Using a brass bar and hammer, drive out the outer race.
(b) Using SST, drive in a new outer race.
SST 09608–35014
Front outer race (09608–06020, 09608–06120)
Rear outer race (09608–06020, 09608–06110)

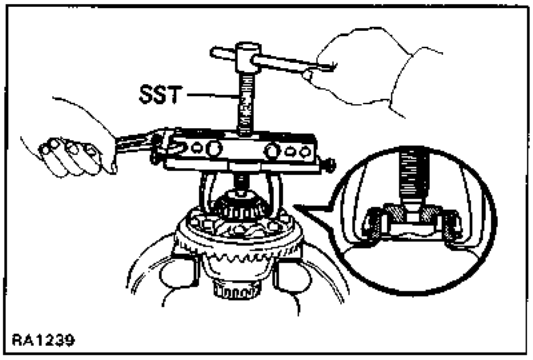

3. REMOVE SIDE BEARING FROM DIFFERENTIAL CASE

Using SST, remove the side bearing from the differential case.

SST 09950–20017

HINT: Fix the claws of SST to the notches in the differ–ential case.

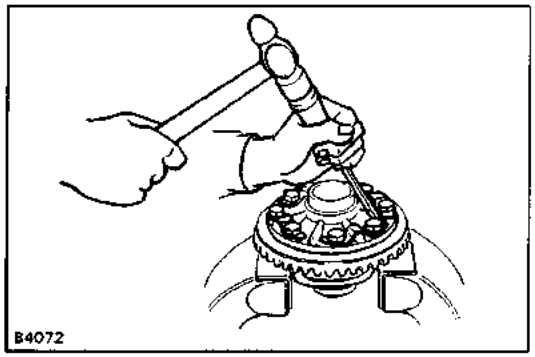

4. REMOVE RING GEAR

(a) Remove the ring gear set bolts and lock plates.

(b) Place matchmarks on the ring gear and differential case.

(c) Using a plastic–faced hammer, tap on the ring gear to separate it from the differential case.

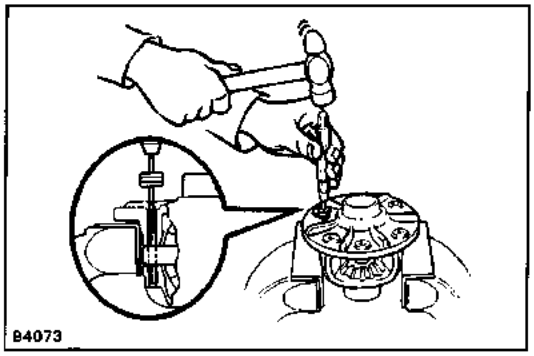

5. DISASSEMBLE DIFFERENTIAL CASE

Using a hammer and punch, drive out the straight pin. Remove the pinion shaft, two pinion gears, two side gears and four thrust washers.

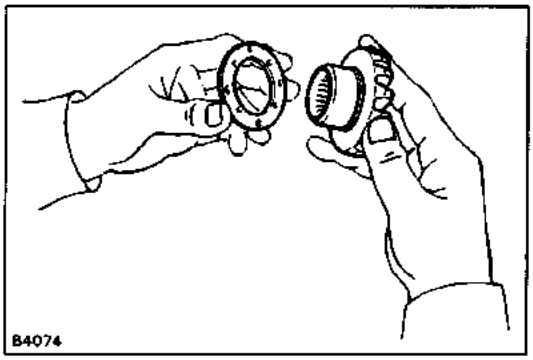

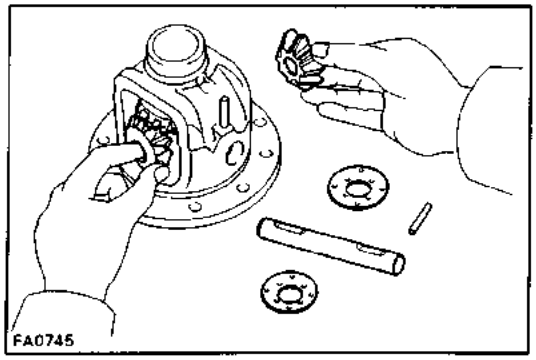

6. ASSEMBLE DIFFERENTIAL CASE

(a) Install the correct thrust washers and side gears.

From the table below select thrust washers that will ensure the backlash is within specification. Try to select washers of the same thickness for both sides.

Standard backlash: 0.05 – 0.20 mm
(0.0020 – 0.0079 in.)

Thrust washer thickness

Thickness mm (in.)
0.96 – 1.04 (0.0378 – 0.0409)
1.06 – 1.14 (0.0417 – 0.0449)
1.16 – 1.24 (0.0457 – 0.0488)
1.26 – 1.34 (0.0496 – 0.0528)

Install the thrust washers and side gears in the differ-ential case.

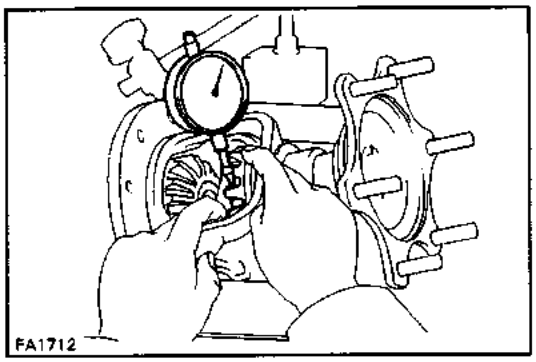

(b) Check the side gear backlash.

- Temporarily install the side gear shaft.
- Measure the side gear backlash while holding one pinion gear toward the case.

Side gear backlash: 0.05 – 0.20 mm
(0.0020 – 0.0079 in.)

If the backlash is not within specification, replace the thrust washers.

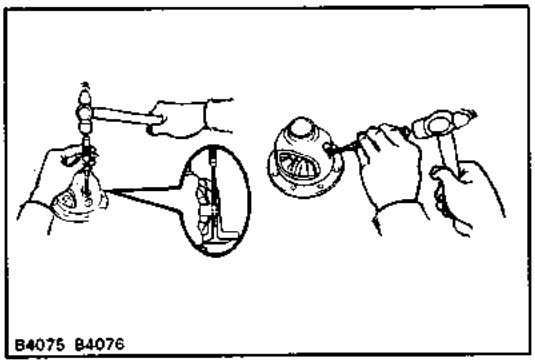

(c) Install straight pin.

- Using a hammer and punch, drive the straight pin through the case and hole in the pinion shaft.
- Stake the pin and differential case.

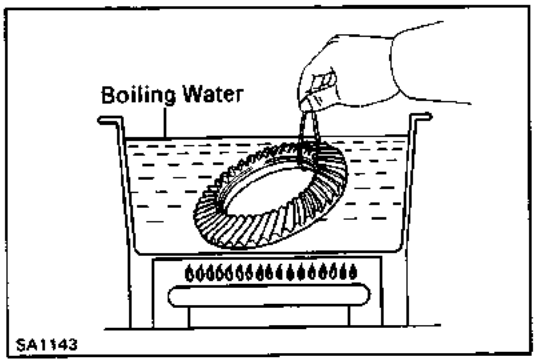

7. INSTALL RING GEAR ON DIFFERENTIAL CASE

(a) Clean the contact surfaces of the differential case and ring gear.
(b) Heat the ring gear in boiling water.
(c) After the moisture on the ring gear has completely evaporated, quickly install the ring gear to the differ–ential case.

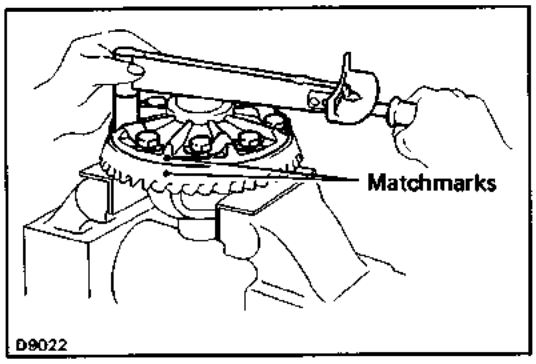

(d) Align the matchmarks on the ring gear and differen–tial case.
(e) Coat the ring gear set bolts with gear oil.
(f) Temporarily install the lock plates and set bolts.
(g) After the ring gear cools down enough, tighten the set bolts uniformly and a little at a time.
Torque: 97 N–m (985 kgf–cm, 71 ft–lbf)

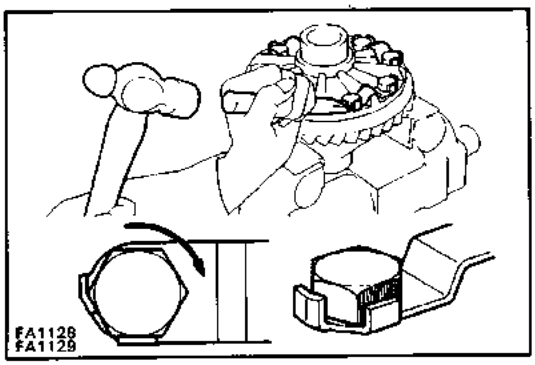

(h) Using a hammer and drift punch, stake the lick plates.
HINT: Stake one claw flush with the flat surface of the nut. For the claw contacting the protruding portion of the nut, stake only the half on the tightening side.

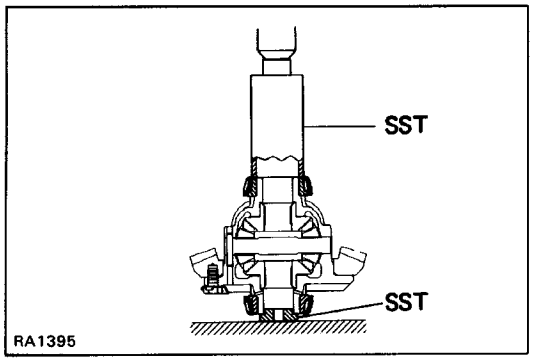

8. INSTALL SIDE BEARINGS

Using a press and SST, drive in the side bearings into the differential case.
SST 09226–10010, 09950–20017

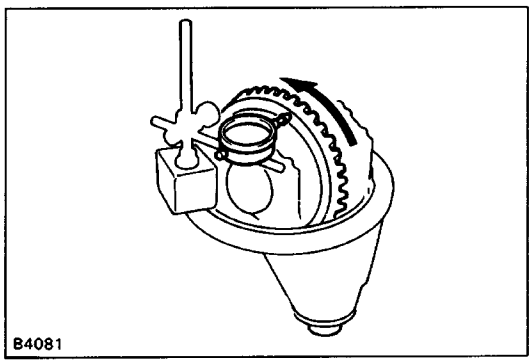

9. CHECK RING GEAR RUNOUT

(a) Install the differential case onto the carrier and in–stall the plate washers to where there is no play in the bearing. (See page SA–75)
(b) Install bearing caps. (See page SA–77)
(e) Using a dial indicator, measure the runout of ring gear.
Maximum runout: 0.07 mm (0.0028 in.)

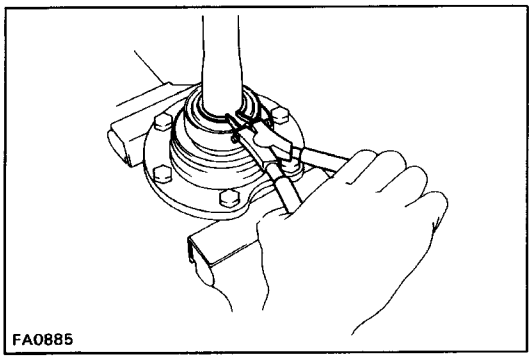

10. REPLACE LH SIDE GEAR SHAFT BEARING

(a) Using a snap ring expander, remove the snap ring.

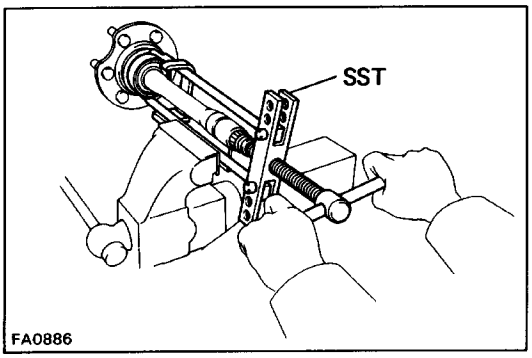

(b) Using SST, remove the bearing from the LH side gear shaft.
SST 09950–20017

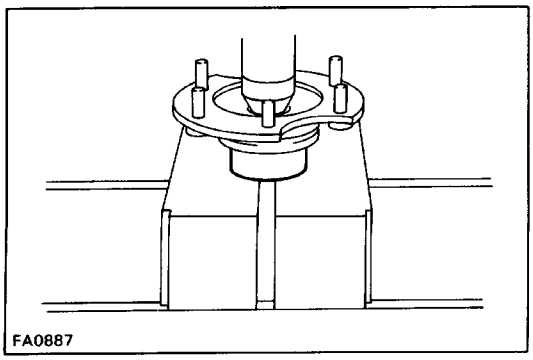

(c) Install a new bearing to the LH side gear shaft.
(d) Using a snap ring expander, install the snap ring.

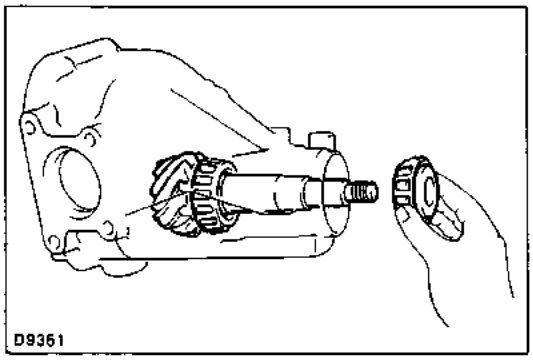

ASSEMBLY OF DIFFERENTIAL

(See page SA–67)

1. TEMPORARILY ADJUST DRIVE PINION PRELOAD

(a) Install the following parts.

- Drive pinion
- Front bearing

HINT: Assemble the spacer and oil seal after adjusting the gear contact pattern.

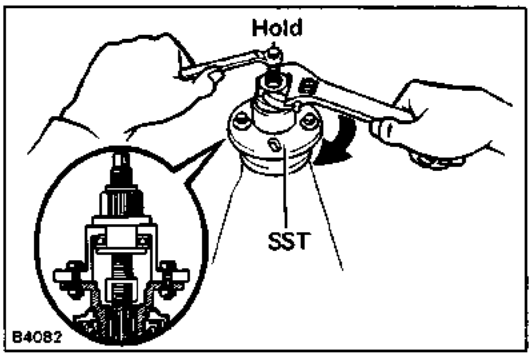

(b) Install the companion flange with SST.
Coat the threads of the nut with MP grease.
SST 09557–22022 (09557–22030)

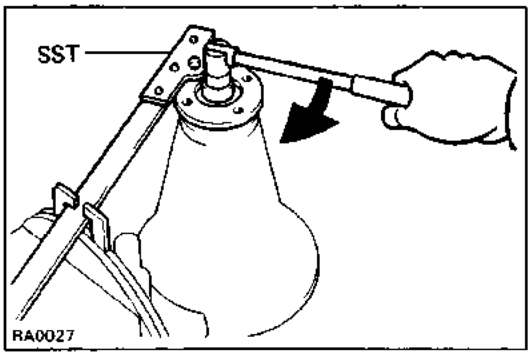

(e) Adjust the drive pinion preload by tightening the companion flange nut.
Using SST to hold the flange, tighten the nut.
SST 09330–00021

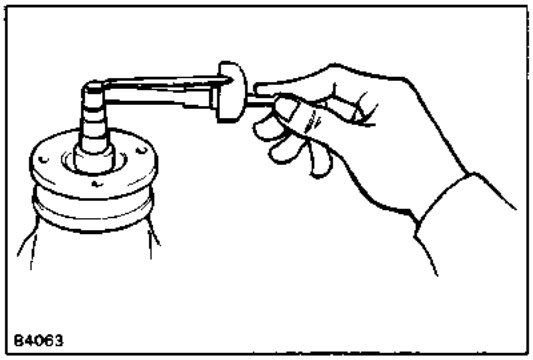

(d) Using a torque meter, measure the preload.

Preload (starting):

New bearing

1.2 – 1.9 N–m

(12 – 19 kgf –cm, 10.4 – 16.5 in. –lbf)

Reused bearing

0.6 – 1.0 N–m

(6 – 10 kgf–cm, 5.2 – 8.7 in. –lbf)

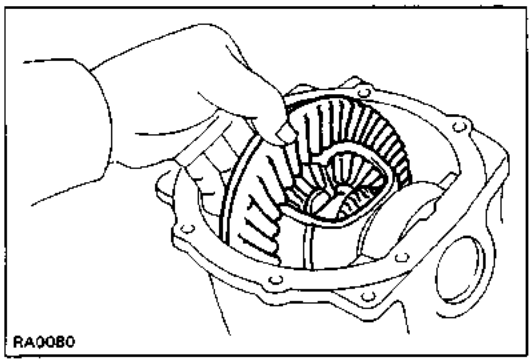

2. INSTALL DIFFERENTIAL CASE IN CARRIER

(a) Place the bearing outer races on their respective bearings. Make sure the left and right outer races are not interchanged.

(b) Install the differential case in the carrier.

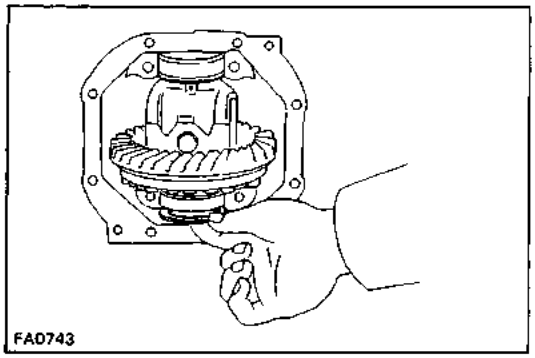

3. ADJUST RING GEAR BACKLASH

(a) Install only the plate washer on the ring gear back side.
HINT: Insure that the ring gear has backlash.

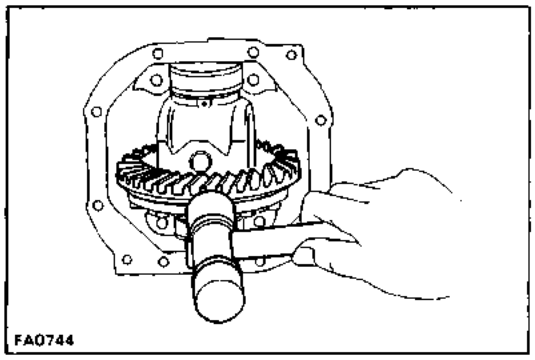

(b) Snug down the washer and bearing by tapping on the ring gear with a plastic–faced hammer.

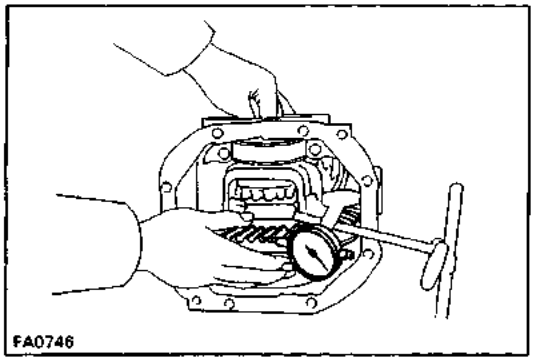

(c) Hold the side bearing boss on the teeth surface of the ring gear and measure the backlash.
Backlash (reference): 0.13 mm (0.0051 in.)

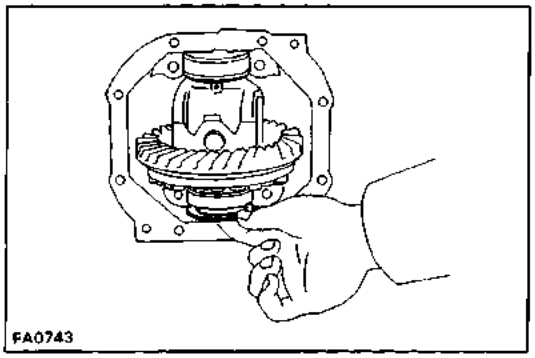

(d) Select a ring gear back plate washer, using the backlash as reference. (See page SA–77)

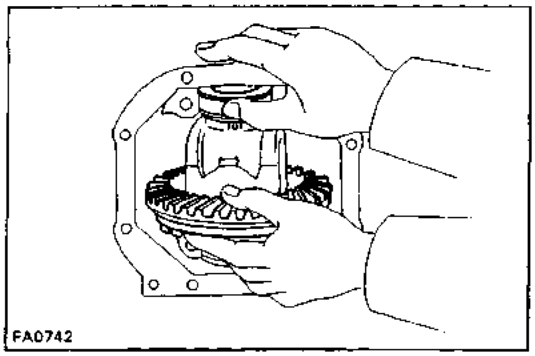

(e) Select a ring gear teeth side washer with a thickness which eliminates any clearance between the outer race and case.

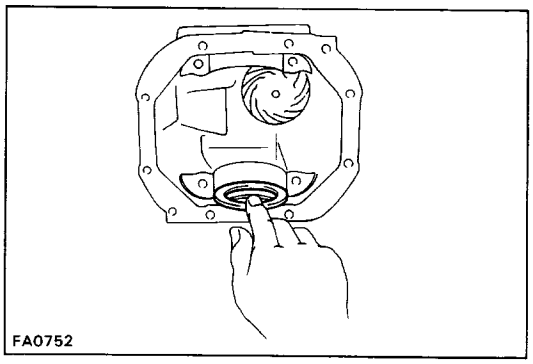

(f) Remove the plate washers and differential case.
(g) Install the plate washer into the lower part of the carrier.

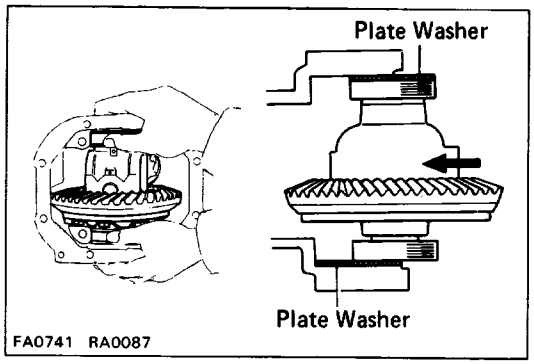

(h) Place the other plate washer onto the differential case together with the outer race, and install the differential case with the outer race into the carrier.

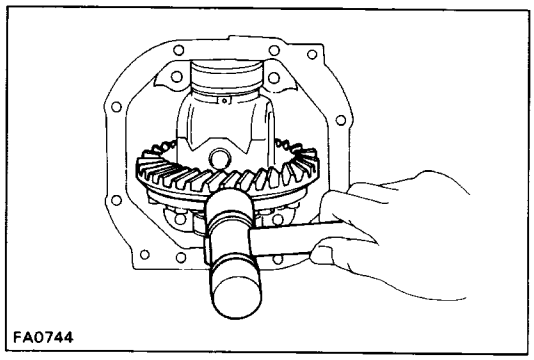

(i) Using a plastic–faced hammer, snug down the washer and bearing by tapping the ring gear.

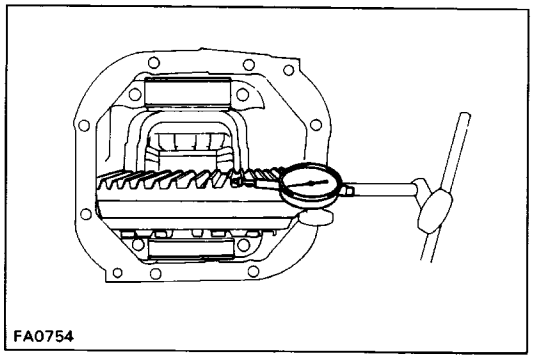

(j) Using a dial indicator, measure the ring gear backlash.
Backlash: 0.13 – 0.18 mm (0.0051 – 0.0071 in.)

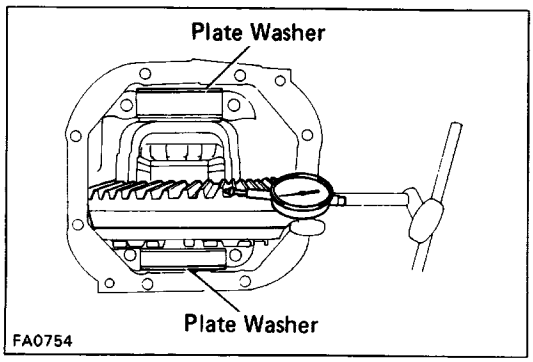

(k) If not within specification, adjust by either increasing or decreasing the number of washers on both sides by an equal amount.
HINT: There should be no clearance between the plate washer and case.
Insure that there is ring gear backlash.

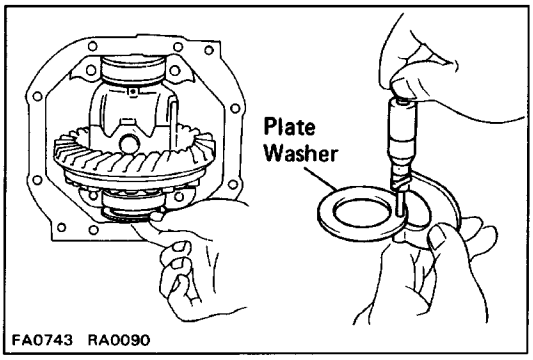

4. ADJUST SIDE BEARING PRELOAD

(a) Remove the ring gear teeth plate washer and measure the thickness.

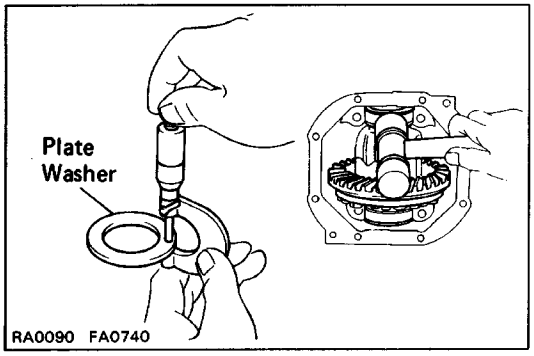

(b) Using the backlash as a reference, install a new washer of 0.06 – 0.09 mm (0.0024 – 0.0035 in.) thicker than the washer removed.
HINT: Select a washer which can be pressed in 2l3 of the way with your finger.

(c) Using a plastic–faced hammer, tap in the side washer.

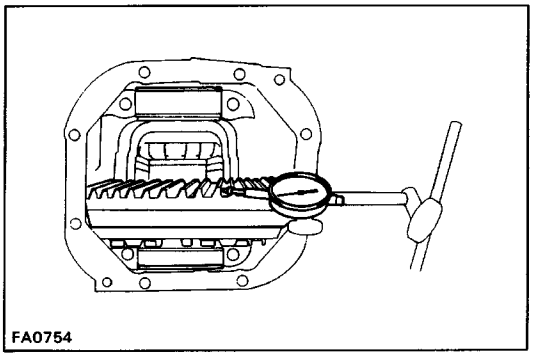

(d) Recheck the ring gear backlash.
Backlash: 0.13 – 0.18 mm (0.0051 – 0.0071 in.)

(e) If not within standard, adjust by either increasing or decreasing the washers on both sides by an equal amount.
HINT: The backlash will change about 0.02 mm (0.0008 in.) with 0.03 mm (0.0012 in.) alteration of the side washer.

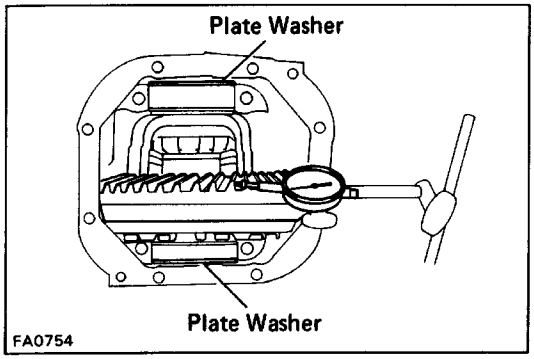

Washer thickness

Thickness mm (in.)	
2.57 – 2.59 (0.1012 – 0.1020)	2.93 – 2.95 (0.1154 – 0.1161)
2.60 – 2.62 (0.1024 – 0.1031)	2.96 – 2.98 (0.1165 – 0.1173)
2.63 – 2.65 (0.1035 – 0.1043)	2.99 – 3.01 (0.1177 – 0.1185)
2.66 – 2.68 (0.1047 – 0.1055)	3.02 – 3.04 (0.1189 – 0.1197)
2.69 – 2.71 (0.1059 – 0 .1067)	3.05 – 3.07 (0.1201 – 0.1209)
2.72 – 2.74 (0.1071 – 0.1079)	3.08 – 3.10 (0.1213 – 0.1220)
2.75 – 2.77 (0.1083 – 0.1091)	3.11 – 3.13 (0.1224 – 0.1232)
2.78 – 2.80 (0.1094 – 0.1102)	3.14 – 3.16 (0.1236 – 0.1244)
2.81 – 2.83 (0.1106 – 0.1114)	3.17 – 3.19 (0.1248 – 0.1256)
2.84 – 2.86 (0.1118 – 0.1126)	3.20 – 3.22 (0.1260 – 0.1268)
2.87 – 2.89 (0.1130 – 0.1138)	3.23 – 3.25 (0.1272 – 0.1280)
2.90 – 2.92 (0.1142 – 0.1150)	

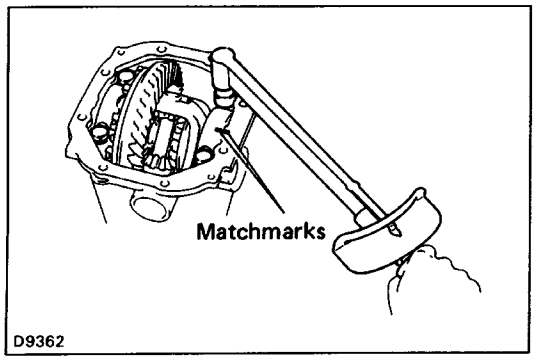

5. INSTALL SIDE BEARING CAPS

Align the matchmarks on the cap and carrier.
Torque: 78 N–m (800 kgf–cm, 58 ft–lbf)

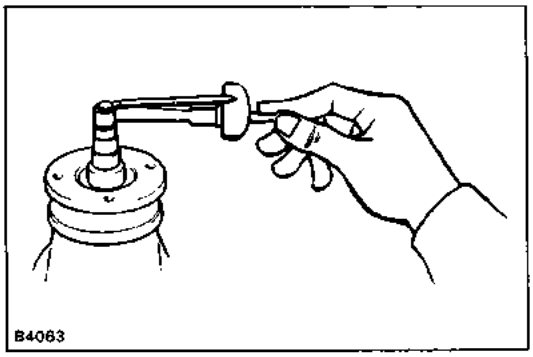

6. MEASURE TOTAL PRELOAD

Using a torque wrench, measure the total preload.

Total preload (starting):

Add drive pinion preload

0.4 – 0.6 N–m

(4 – 6 kgf–cm, 3.5 – 5.2 in.–lbf)

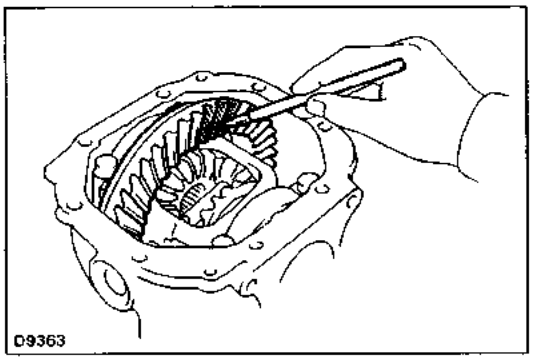

7. INSPECT TOOTH CONTACT BETWEEN RING GEAR AND DRIVE PINION

(a) Coat 3 or 4 teeth at three different positions on the ring gear with red lead .

(b) Hold the companion flange firmly and rotate the ring gear in both directions.

(c) Inspect the tooth pattern.

If the teeth are not contacting properly, use the following chart to select a proper washer for correction.

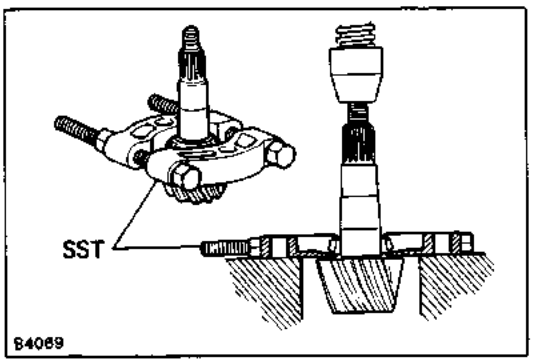

Washer thickness

Thickness mm (in.)	
2.24 (0.0882)	2.51 (0.0988)
2.27 (0.0894)	2.54 (0.1000)
2.30 (0.0906)	2.57 (0.1012)
2.33 (0.0917)	2.60 (0.1024)
2.36 (0.0929)	2.63 (0.1035)
2.39 (0.0941)	2.66 (0.1047)
2.42 (0.0953)	2.69 (0.1059)
2.45 (0.0965)	2.72 (0.1071)
2.48 (0.0976)	

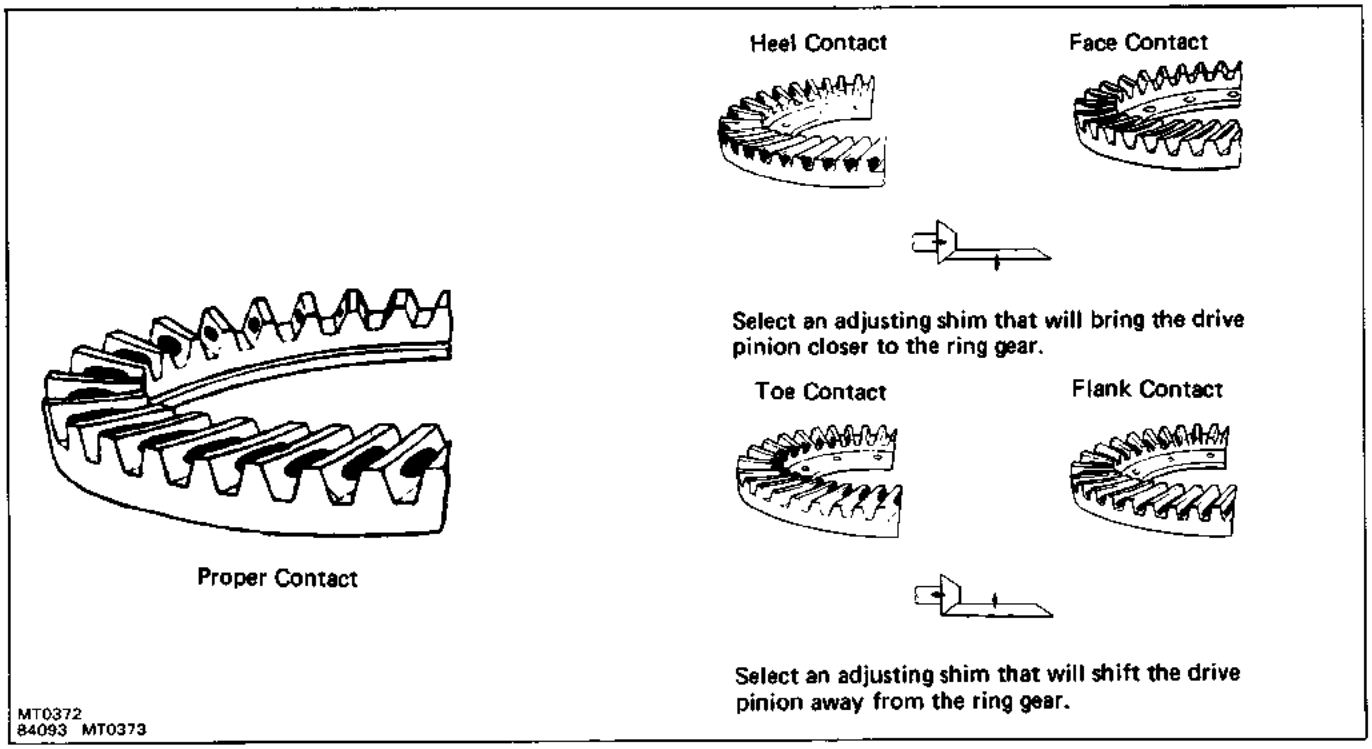

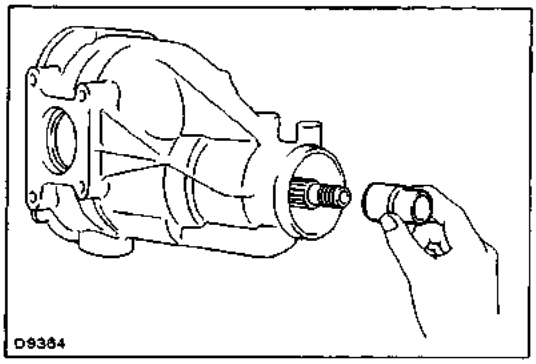

8. REMOVE COMPANION FLANGE

(See step 11 on page SA–68)

9. REMOVE FRONT BEARING

(See step 12 on page SA–69)

10. INSTALL NEW BEARING SPACER AND FRONT BEARING

(a) Install a new bearing spacer on the drive pinion.

(b) Install the front bearing on the drive pinion.

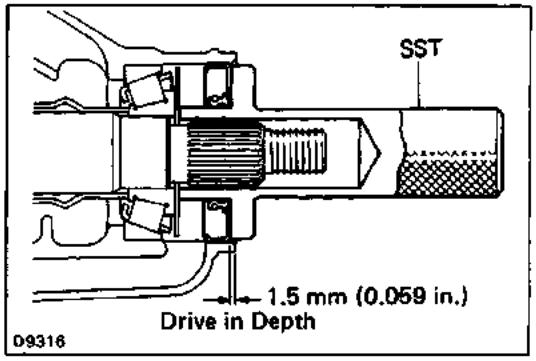

11. INSTALL OIL SLINGER AND NEW OIL SEAL

(a) Install the oil slinger.

(b) Using SST, drive in a new oil seal.

SST 09554–3001 1

Oil seal drive in depth: 1.5 mm (0.059 in.)

(c) Apply MP grease to the oil seal lip.

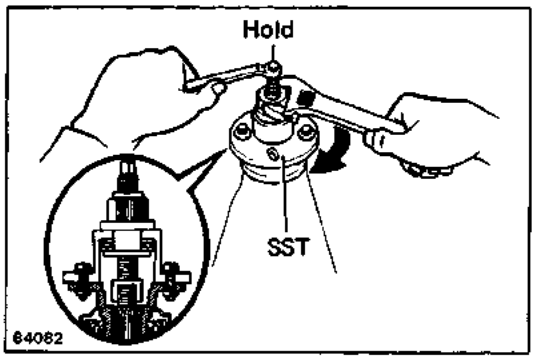

12. INSTALL COMPANION FLANGE

(a) Using SST, install the companion flange on the shaft.

SST 09557–22022 (09557–22030)

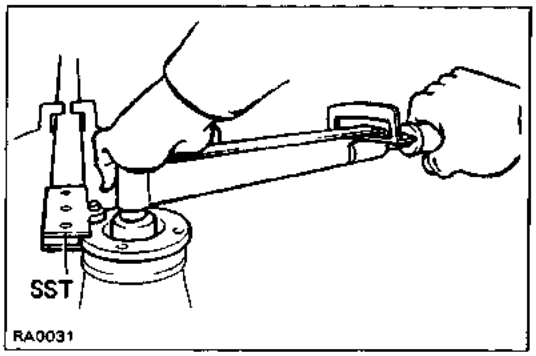

(b) Coat the threads of a new nut with MP grease.

(c) Using SST to hold the flange, tighten the nut.

Torque the nut.

SST 09330–00021

Torque: 120 N–m (1,225 kgf–cm, 89 ft–lbf)

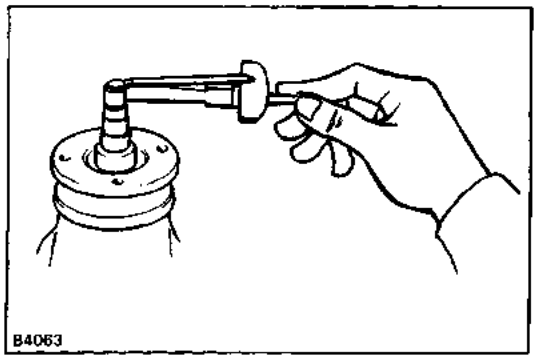

13. CHECK FRONT BEARING PRELOAD

Using a torque meter, measure the preload of the back–lash between the drive pinion and ring gear.

Preload (starting):

New bearing

1.2 – 1.9 N–m

(12 – 19 kgf–cm, 10.4 – 16.5 in.–lbf)

Reused bearing

0.6 – 1.0 N–m

(6 – 10 kgf–cm, 5.2 – 8.7 in.–lbf)

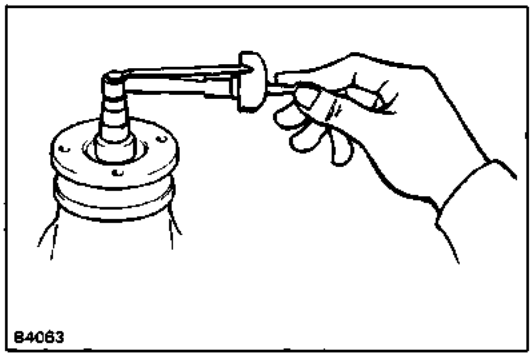

(a) If the preload is greater than specification, replace the bearing spacer.
(b) If the preload is less than specification, retighten the nut 13 N–m (130 kgf–cm, 9 ft–lbf) a little at a time until the specified preload is reached.
Maximum torque: 223 N–m (2,275 kgf–cm, 165 ft–lbf)
If the maximum torque is exceeded while retightening the nut, replace the bearing spacer and repeat the preload procedure. Do not back off the pinion nut to reduce the preload.

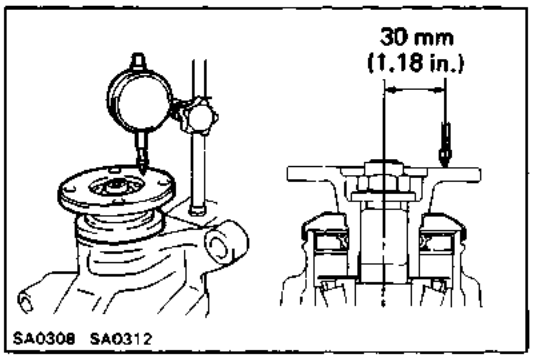

14. CHECK RUNOUT OF COMPANION FLANGE
Using a dial indicator, measure the vertical and lateral runout of the companion flange.
Maximum vertical runout: 0.10 mm 10.0039 in.)

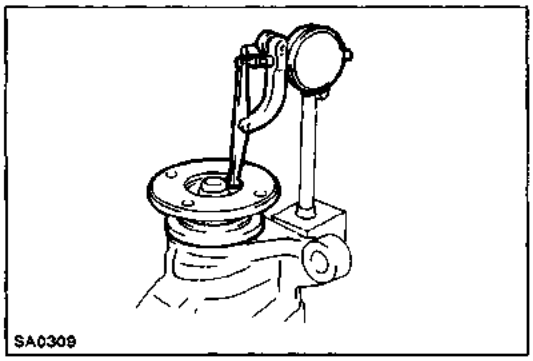

Maximum lateral runout: 0.10 mm (0.0039 in.)
If the runout is greater than maximum, inspect the bearings.

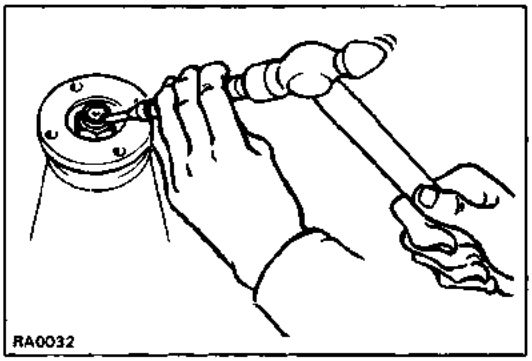

15. STAKE DRIVE PINION NUT

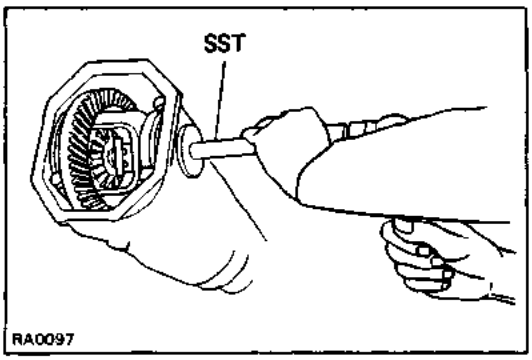

16. INSTALL NEW SIDE GEAR SHAFT OIL SEAL
(a) Coat the oil seal lip with MP grease.
(b) Using SST, drive in the oil seal until it is flush with the carrier end surface.
SST 09550–22011 (09550–00020, 09550–00031)

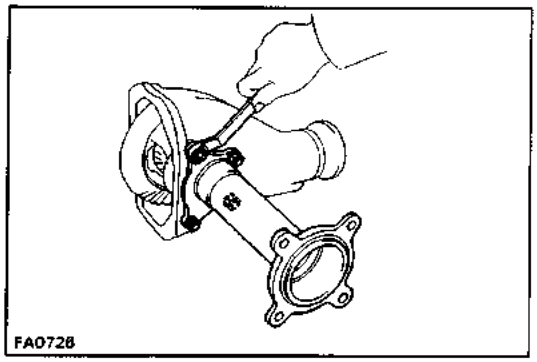

17. INSTALL DIFFERENTIAL TUBE

Install the differential tube to the differential carrier with the four bolts.

Torque: 88 N–m (900 kgf–cm, 65 ft–lbf)

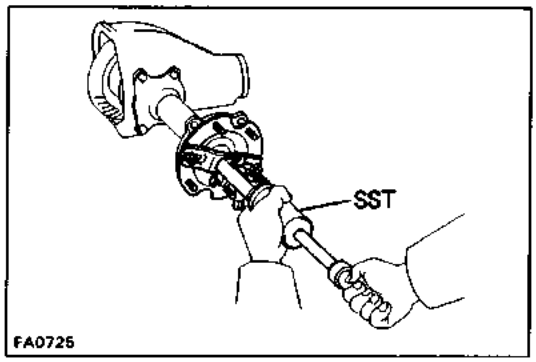

18. INSTALL SIDE GEAR SHAFTS

(a) Before installing the shafts, replace the snap ring.

(b) Using SST, install the side gear shafts to the differ–ential carrier.

SST 09910–00015
(09911–00011, 09912–00010, 09914–00011)

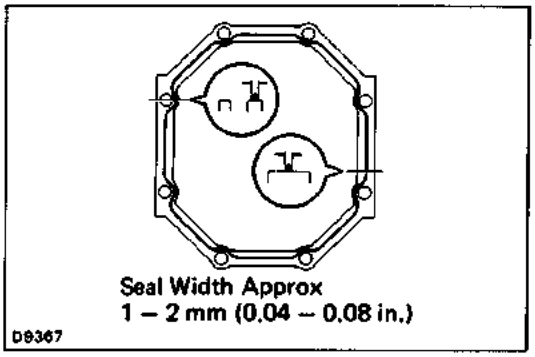

19. INSTALL DIFFERENTIAL CARRIER COVER

(a) Remove any packing material and be careful not to drop oil on the contacting surface of the differential carrier or carrier cover.

(b) Apply seal packing to the carrier cover.

Seal packing: Part No. 08826–00090, THREE BOND 1281 or equivalent

HINT: Install the carrier cover within ten minutes after applying seal packing.

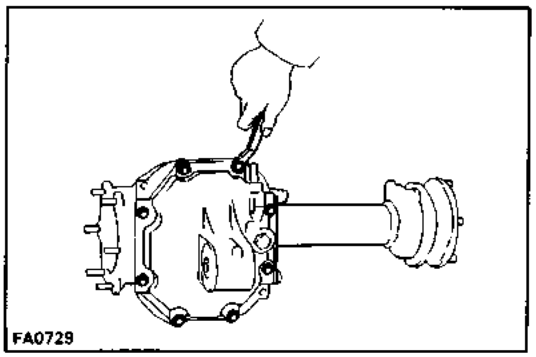

(c) Install and torque the bolts.

Torque: 47 N–m (475 kgf–cm, 34 ft–lbf)

Disassembly and Assembly of Differential (with A.D.D.)

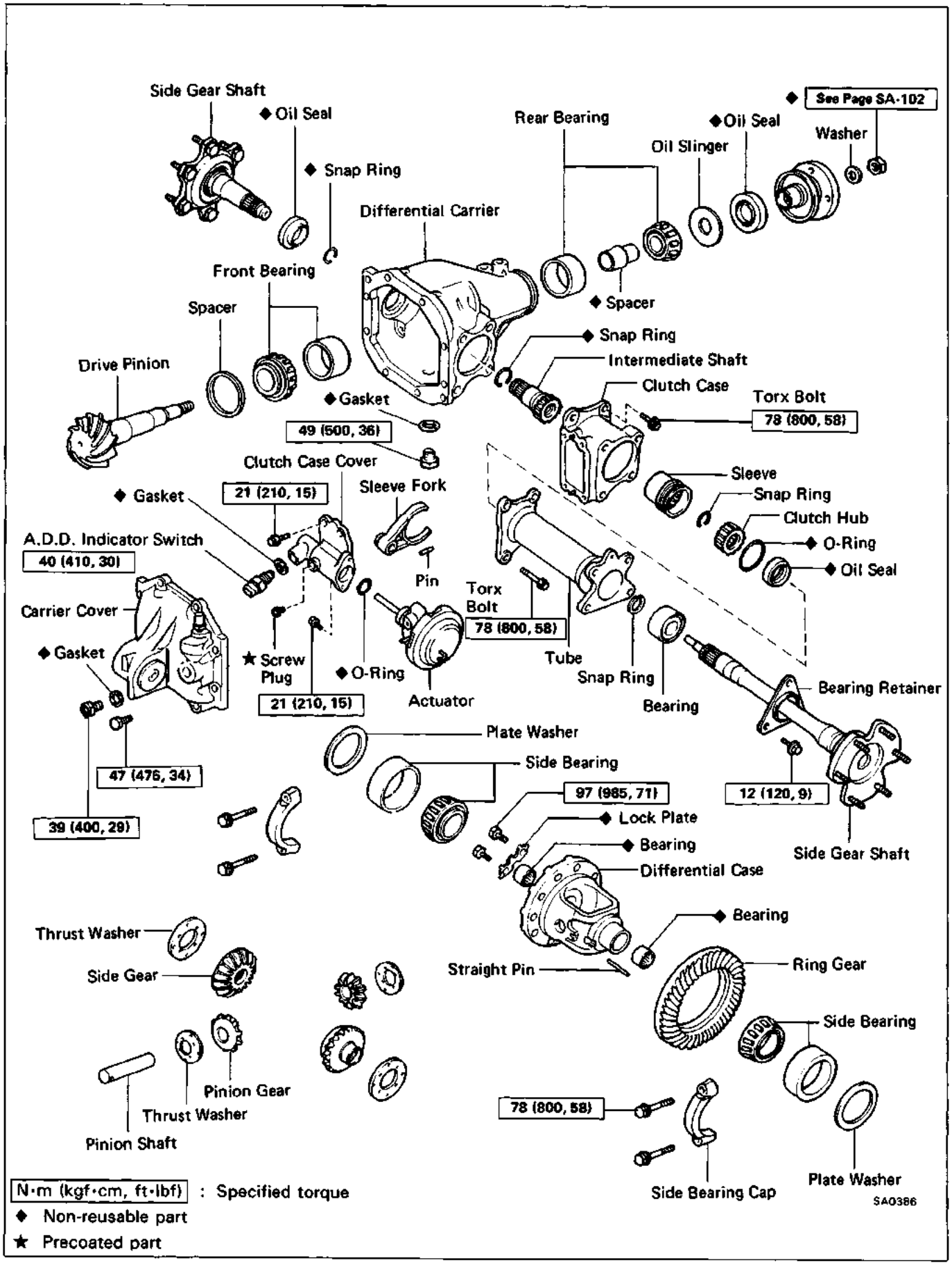

N·m (kgf·cm, ft·lbf) : Specified torque
◆ Non-reusable part
★ Precoated part

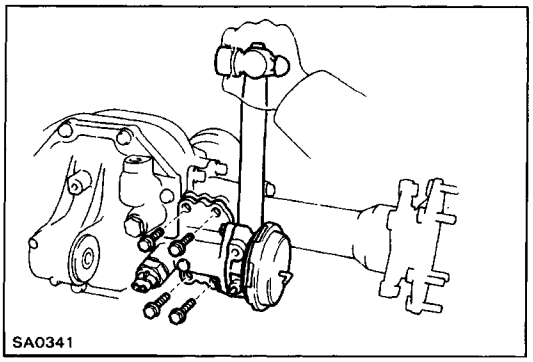

DISASSEMBLY OF DIFFERENTIAL

1. REMOVE ACTUATOR

(a) Remove the four bolts.

(b) Using a hammer, remove the actuator.

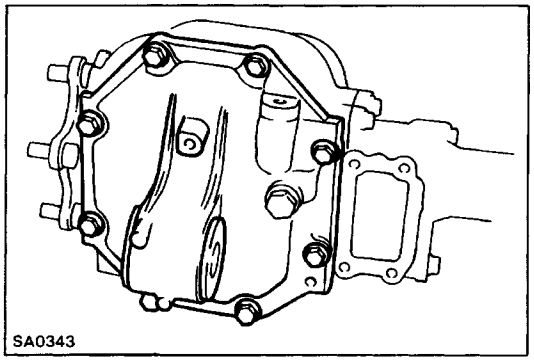

2. REMOVE DIFFERENTIAL CARRIER COVER

Remove the eight bolts and tap off the cover with a plastic–faced hammer.

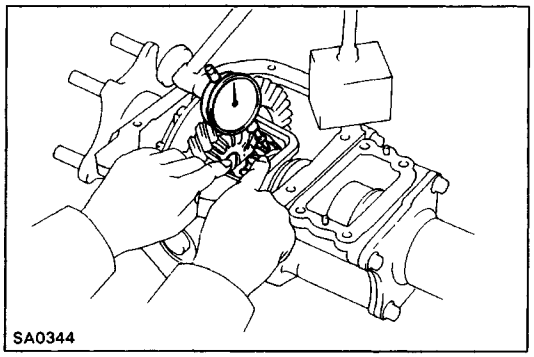

3. CHECK SIDE GEAR BACKLASH

Measure the side gear backlash while holding one pinion gear toward the case.

Standard backlash: 0.05 – 0.20 mm
(0.0020 – 0.0079 in.)

If the backlash is out of specification, install the correct thrust washers. (See page SA–90)

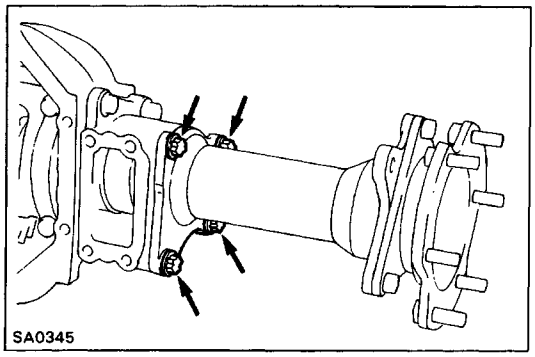

4. REMOVE LH SIDE GEAR SHAFT WITH TUBE

(a) Remove the four torx bolts.

Torx wrench: E14 (Part No. 09044–00010 or locally manufactured tool)

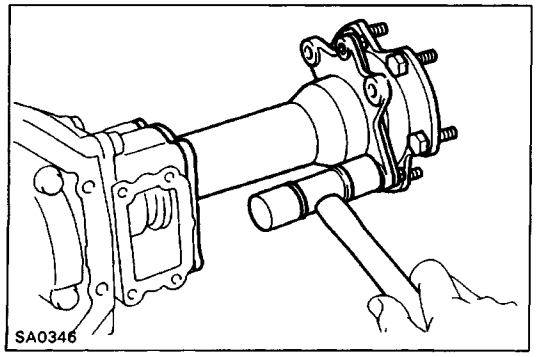

(b) Using a plastic–faced hammer, tap on the tube to re–move it.

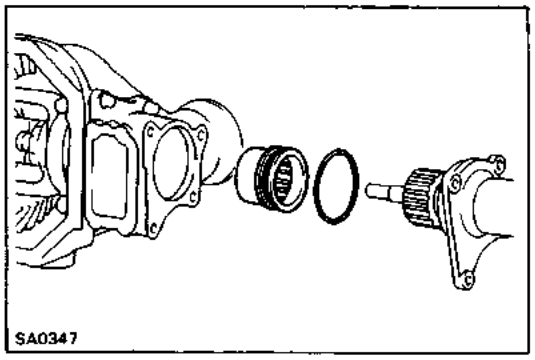

(c) Remove the sleeve.
(d) Remove the 0–ring from the tube.

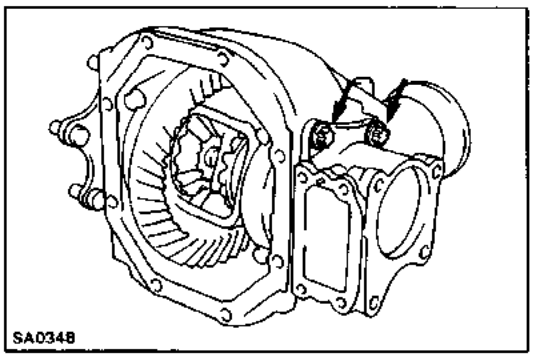

5. REMOVE CLUTCH CASE

(a) Remove the two torx bolts.
Torx wrench: E14 (Part No. 09044–00010 or locally manufactured tool)

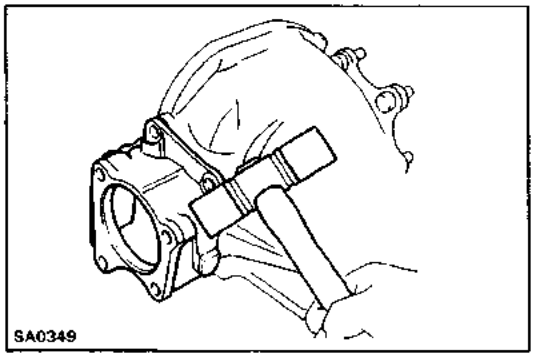

(b) Using a plastic–faced hammer, tap on the clutch case to remove it.

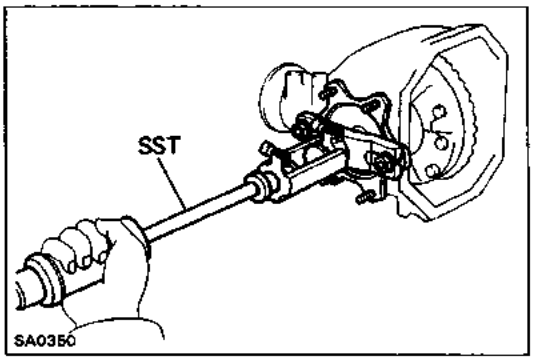

6. REMOVE RH SIDE GEAR SHAFT

Using SST, pull off the RH side gear shaft.
SST 09910–00015
(09911–00011, 09912–00010, 09914–00011)

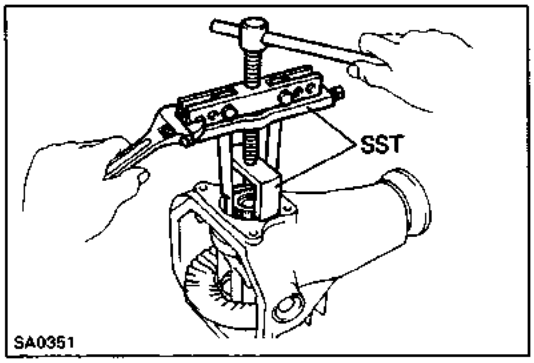

7. REMOVE INTERMEDIATE SHAFT

Using SST, pull off the intermediate shaft.
SST 09350–20015 (09369–20040), 09950–20017

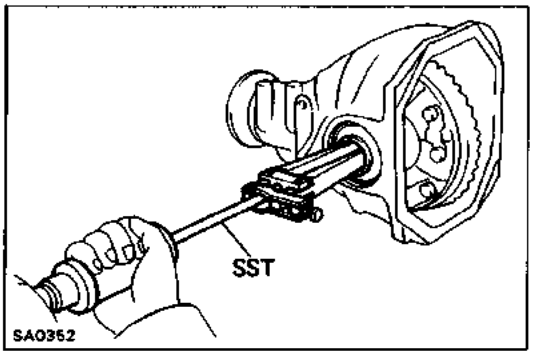

8. REMOVE RH SIDE OIL SEAL

Using SST, remove the oil seal.
SST 09308–00010

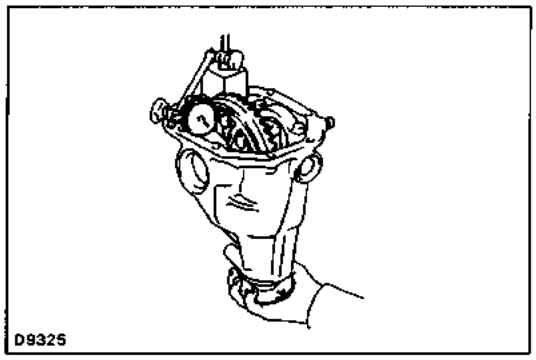

9. CHECK RING GEAR RUNOUT

Using a dial indicator, measure the ring gear runout.
Maximum runout: 0.07 mm (0.0028 in.)
If the runout is greater than maximum, replace the ring gear and drive pinion as a set.

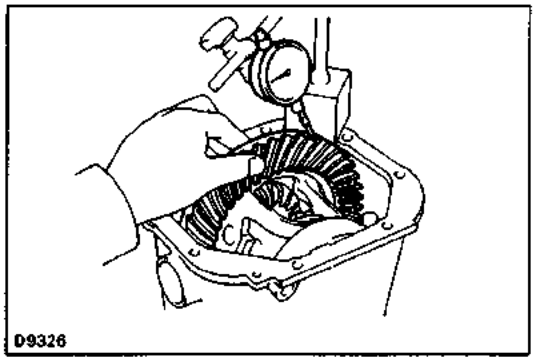

10. CHECK RING GEAR BACKLASH

(a) Fix the dial indicator on the tooth surface at a 90° angle.
(b) Holding the drive pinion flange, measure the ring gear backlash.
Ring gear backlash: 0.13 – 0.18 mm (0.0051 – 0.0071 in.)
If the backlash is not within specification, adjust the ring gear backlash.
HINT: Measure from three or more places on the cir–cumference of the ring gear.

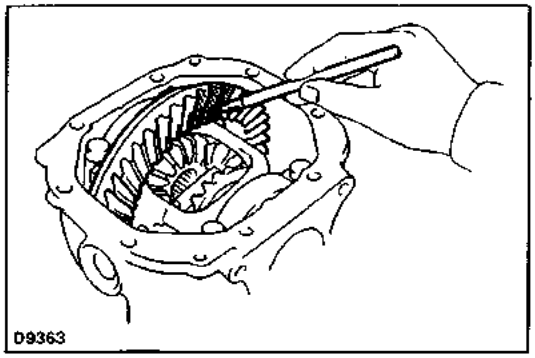

11. INSPECT TOOTH CONTACT BETWEEN RING GEAR AND DRIVE PINION (SEE STEP 7 ON PAGE SA–100)

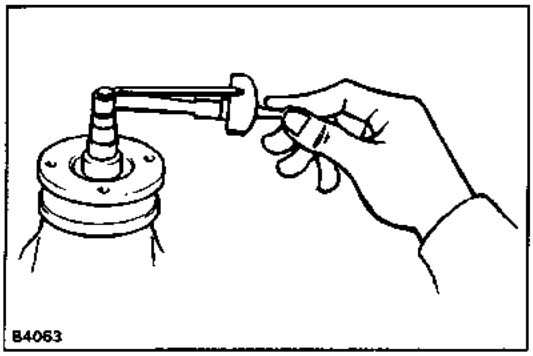

12. MEASURE DRIVE PINION PRELOAD

Using a torque gauge, measure the preload of the back–lash between the drive pinion and ring gear.
Preload (starting):
0.6 – 1.0 N–m (6 – 10 kgf–cm, 5.2 – 8.7 in.–lbf)

13. CHECK TOTAL PRELOAD

Using a torque gauge, measure the total preload.
Total preload (starting):
Add drive pinion preload
0.4 – 0.6 N–m
(4 – 6 kgf–cm, 3.5 – 5.2 in.–lbf)

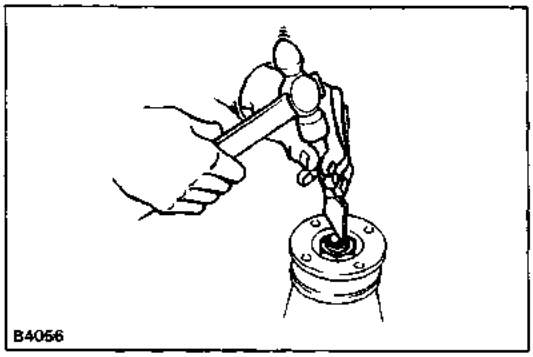

14. REMOVE COMPANION FLANGE

(a) Using a hammer and chisel, loosen the staked part of the nut.

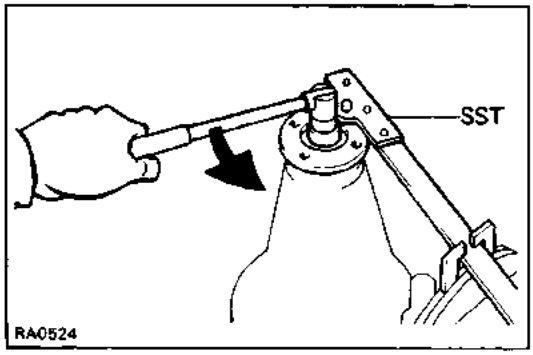

(b) Using SST to hold the flange, remove the nut.
SST 09330–00021

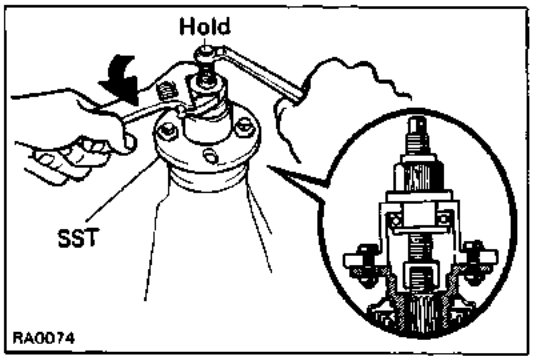

(c) Using SST, remove the companion flange.
SST 09557–22022 (09557–22030)

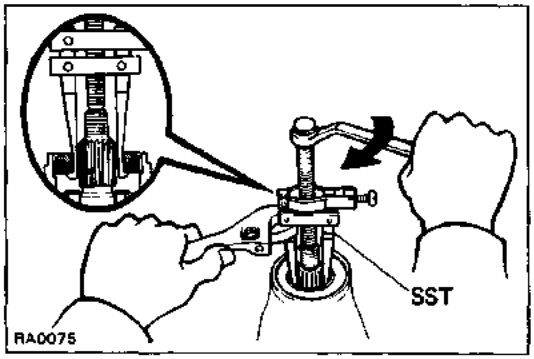

15. REMOVE OIL SEAL AND OIL SLINGER

(a) Using SST, remove the oil seal from the housing.
SST 09308–10010

(b) Remove the oil slinger.

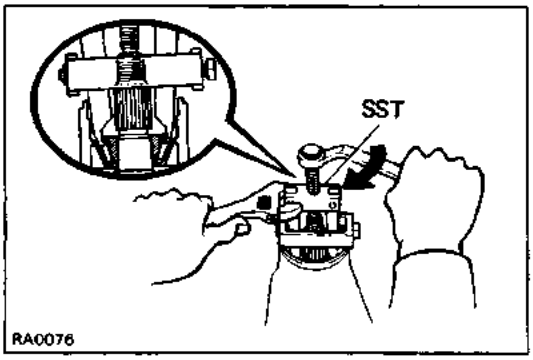

16. REMOVE REAR BEARING AND BEARING SPACER

(a) Using SST, remove the rear bearing from drive pinion.
SST 09556–30010

(b) Remove the bearing spacer.
If the rear bearing is damaged or worn, replace the bearing.

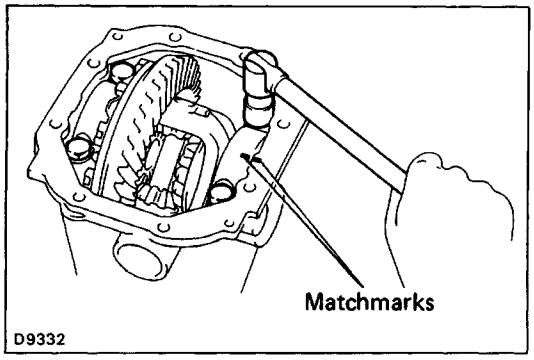

17. REMOVE DIFFERENTIAL CASE AND RING GEAR

(a) Place matchmarks on the bearing cap and differen–tial carrier.

(b) Remove the two bearing caps.

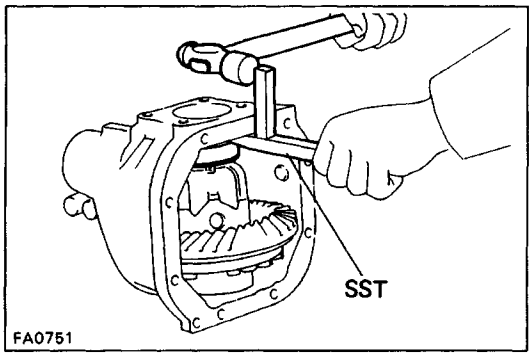

(c) Using SST and a hammer, remove the two side bearing preload adjusting plate washers.
SST 09504–22011
HINT: Measure the adjusting plate washer and note the thickness.

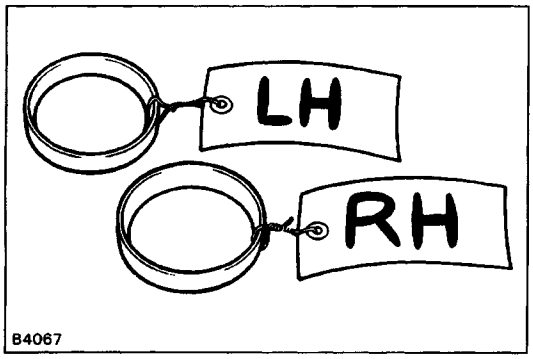

(d) Remove the differential case with bearing outer race from the carrier.
HINT: Tag the bearing outer races to show the location for reassembly.

18. REMOVE DRIVE PINION FROM DIFFERENTIAL CARRIER

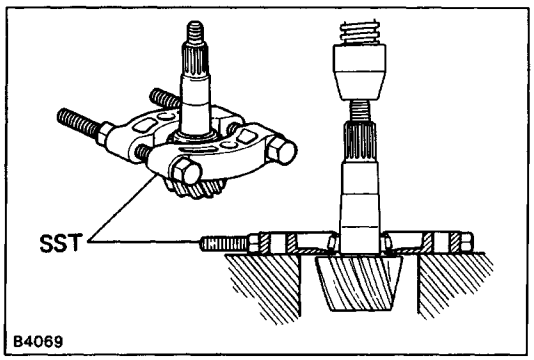

INSPECTION AND REPLACEMENT OF DIFFERENTIAL

1. REPLACE DRIVE PINION FRONT BEARING

(a) Using SST, press out the front bearing from the drive pinion.
SST 09950–00020
HINT: If the drive pinion or ring gear are damaged, re–place them as a set.

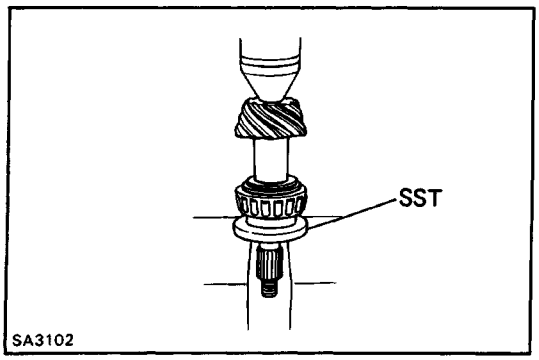

(b) Install the washer on the drive pinion.

(c) Using SST, press in the front bearing onto the drive pinion.
SST 09506–30012

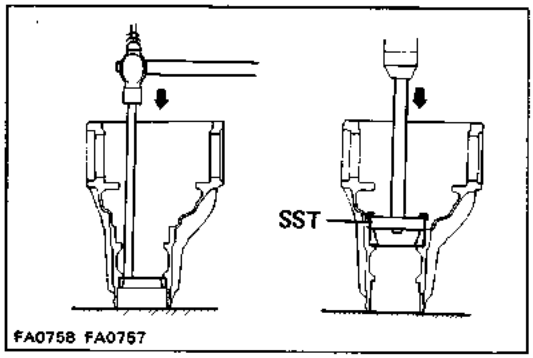

2. REPLACE DRIVE PINION FRONT AND REAR BEARING OUTER RACES

(a) Using a brass bar and hammer, drive out the outer race.

(b) Using SST, drive in a new outer race.
SST 09608–35014
Front outer race (09608–06020, 09608–06120)
Rear outer race (09608–06020, 09608–06110)

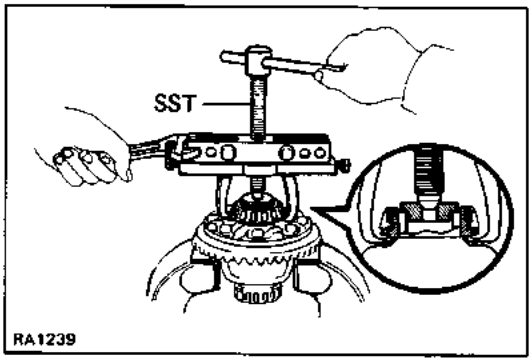

3. REMOVE SIDE BEARING FROM DIFFERENTIAL CASE

Using SST, remove the side bearing from the differential case.
SST 09950–20017
HINT: Fix the claws of SST to the notches in the differential case.

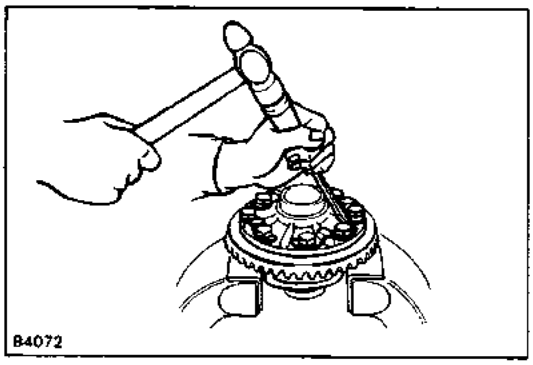

4. REMOVE RING GEAR

(a) Remove the ring gear set bolts and lock plates.

(b) Place matchmarks on the ring gear and differential case.

(c) Using a plastic–faced hammer, tap on the ring gear to separate it from the differential case.

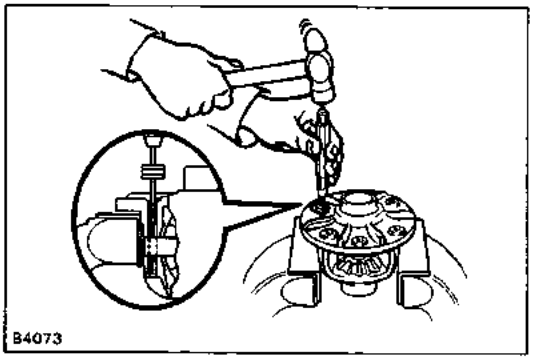

5. DISASSEMBLE DIFFERENTIAL CASE

(a) Using a hammer and punch, drive out the straight pin. Remove the pinion shaft, two pinion gears, two side gears and four thrust washers.

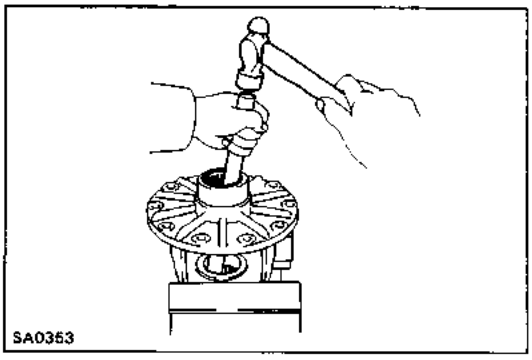

(b) Using a hammer and brass bar, drive out the needle bearings.

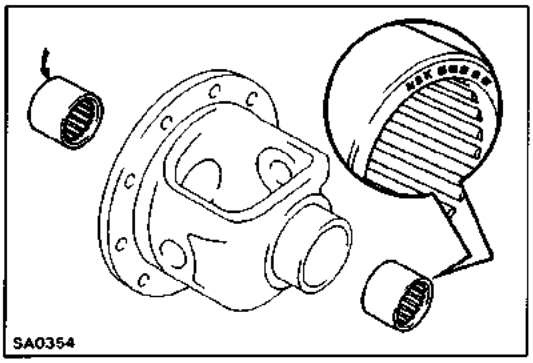

6. ASSEMBLE DIFFERENTIAL CASE

(a) Using SST, press the new needle bearing into the differential case.

NOTICE: Press in the bearings, with the engraved side of each bearing facing outward from the differential case.

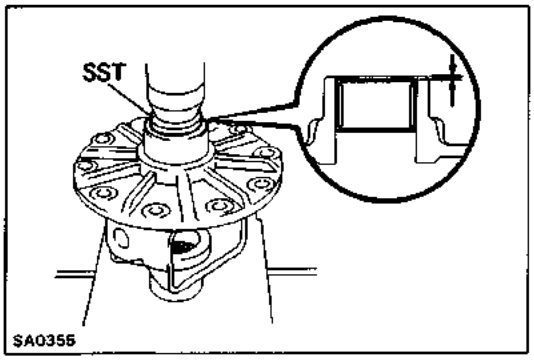

Bearing press in depth: 2.0 mm 10.079 in.)

SST 09950–20017

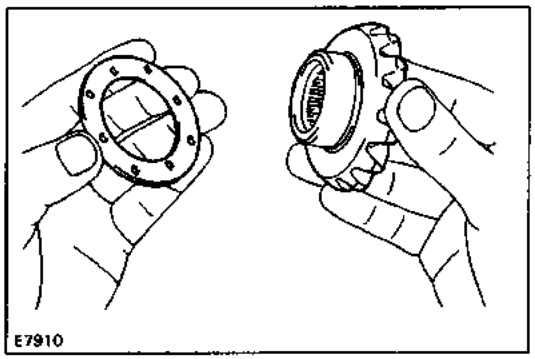

(b) Install the thrust washers to the side gears.

(c) Install the side gears with thrust washers and pinion gears with thrust washers.

(d) Install the pinion shaft.

(e) Check the side gear backlash.

Measure the side gear backlash while holding one pinion gear toward the case.

Backlash: 0.05 – 0.20 mm (0.0020 – 0.0079 in.)

If the backlash is not within specification, install the side gear thrust washers of different thickness.

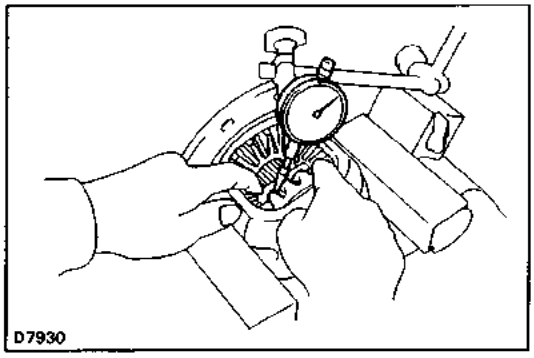

Thickness	mm (in.)
0.96 – 1.04	(0.0378 – 0.0409)
1.06 – 1.14	(0.0417 – 0.0449)
1.16 – 1.24	(0.0457 – 0.0488)
1.26 – 1.34	(0.0496 – 0.0528)

HINT: Use washers of same thickness on both the right and left sides.

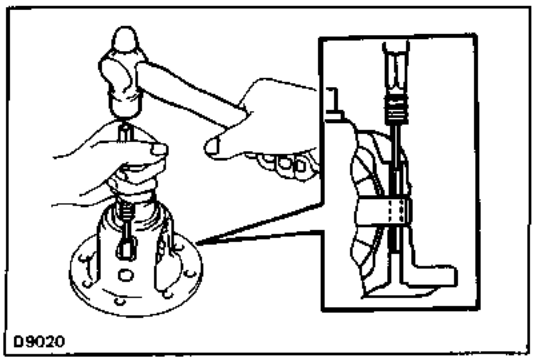

(f) Using a hammer and punch, drive in the straight pin through the case and hole in the pinion shaft.

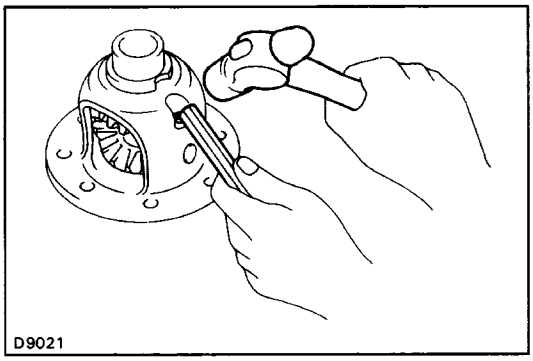

(g) Stake the case.

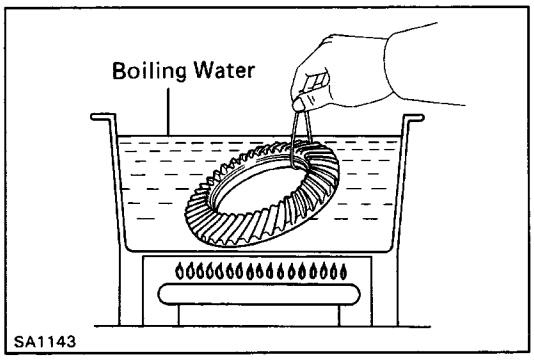

7. INSTALL RING GEAR ON DIFFERENTIAL CASE

(a) Clean the contact surfaces of the differential case and ring gear.
(b) Heat the ring gear in boiling water.
(c) After the moisture on the ring gear has completely evaporated, quickly install the ring gear to the differ–ential case.

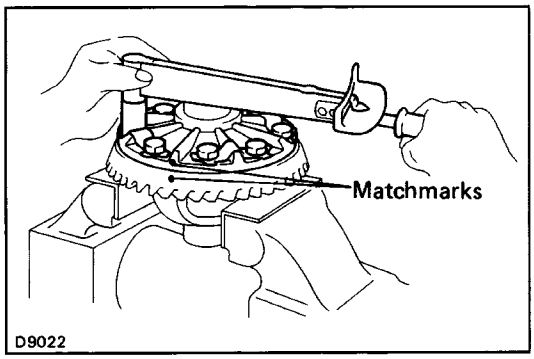

(d) Align the matchmarks on the ring gear and differen–tial case.
(e) Coat the ring gear set bolts with gear oil.
(f) Temporarily install the lock plates and set bolts.
(g) After the ring gear cools down enough, tighten the set bolts uniformly and a little at a time.
Torque: 97 N–m(985 kgf–cm, 71 ft–lbf)

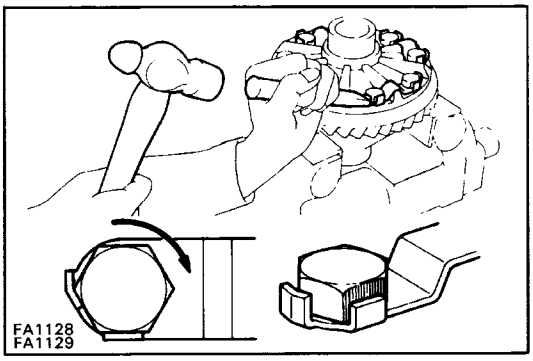

(h) Using a hammer and drift punch, stake the lick plates.
HINT: Stake one claw flush with the flat surface of the nut. For the claw contacting the protruding por–tion of the nut, stake only the half on the tightening side.

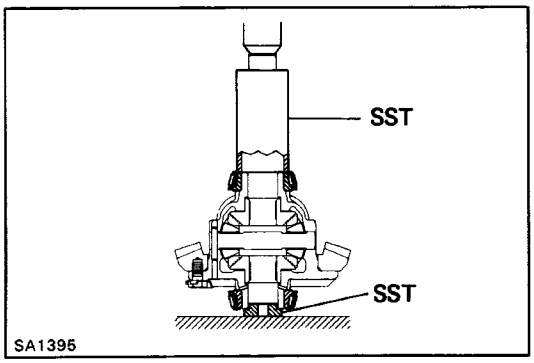

8. INSTALL SIDE BEARINGS

Using a press and SST, install the side bearings to the dif ferential case.
SST 09226–10010, 09950–20017

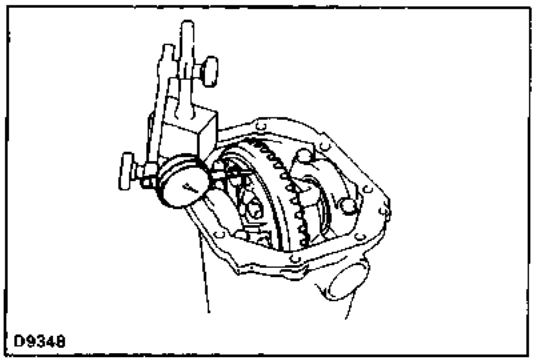

9. CHECK RING GEAR RUNOUT

(a) Install the differential case onto the carrier and in–stall the plate washers to where there is no play in the bearing. (See page SA–97)

(b) Install bearing caps. (See page SA–99)

(c) Using a dial indicator, measure the runout of ring gear.

Maximum runout: 0.07 mm (0.0028 in.)

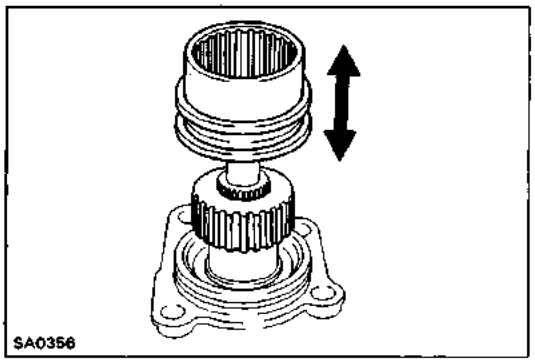

INSPECTION AND REPLACEMENT OF LH SIDE GEAR SHAFT

1. INSPECT CLUTCH HUB AND CLUTCH SLEEVE

(a) Check the wear and damage of the clutch hub and clutch sleeve.
If necessary, replace them.

(b) Check that the clutch sleeve slides smoothly on the clutch hub.

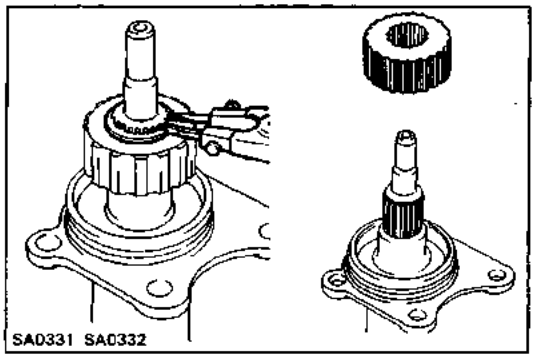

2. REMOVE CLUTCH HUB

(a) Using a snap ring expander, remove the snap ring.

(b) Remove the clutch hub from the side gear shaft.

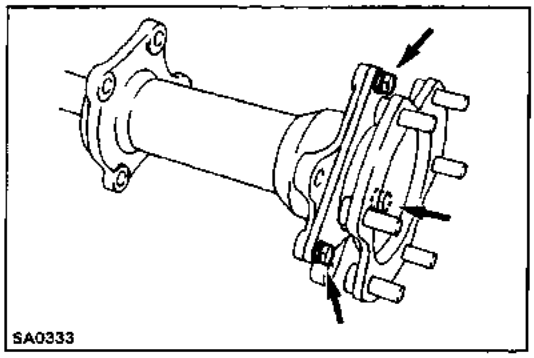

3. REMOVE SIDE GEAR SHAFT FROM TUBE

(a) Remove the three bearing retainer bolts.

(b) Remove the side gear shaft from the tube.

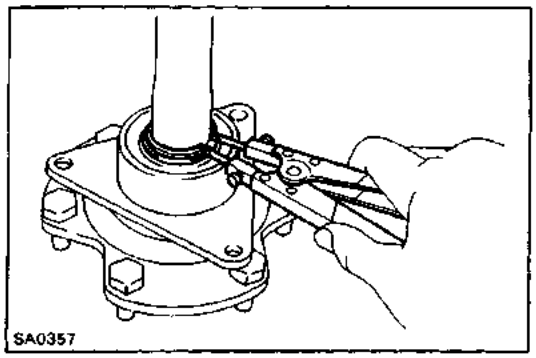

4. REPLACE LH SIDE GEAR SHAFT BEARING

(a) Using a snap ring expander, remove the snap ring.

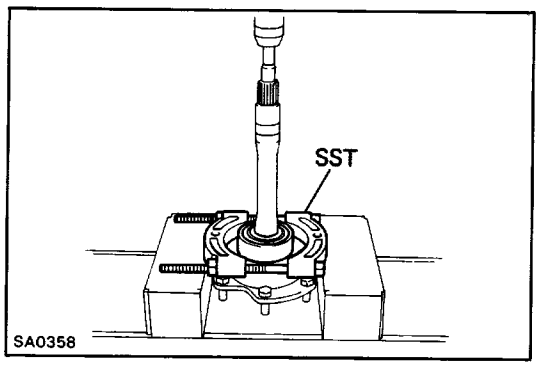

(b) Using a press and SST, remove the bearing.
SST 09950–00020

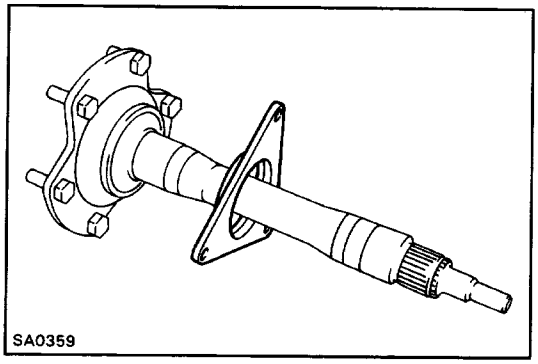

(c) Remove the bearing retainer.
(d) Install the bearing retainer.

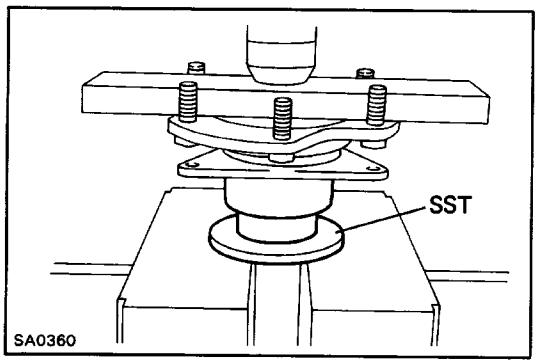

(e) Using a press and SST, install the new bearing.
SST 09316–60010 (09316–00040)
NOTICE: Be careful not to damage the bearing retainer.

5. REPLACE SIDE OIL SEAL
(See page SA–62)

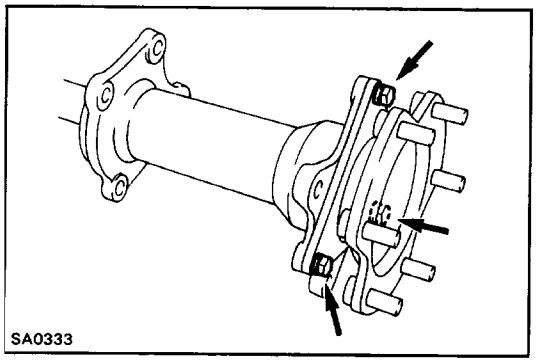

6. INSTALL SIDE GEAR SHAFT
(a) Install the side gear shaft into the tube.
(b) Tighten the three bearing retainer bolts.

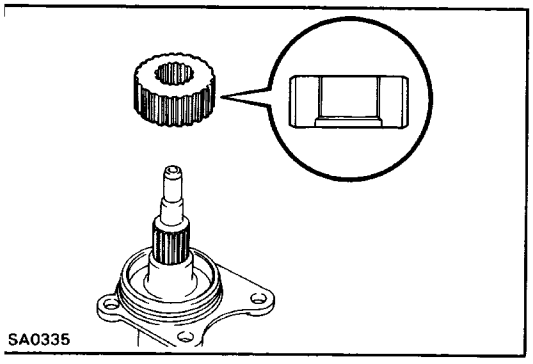

7. INSTALL CLUTCH HUB
(a) Install the clutch hub to the shaft.

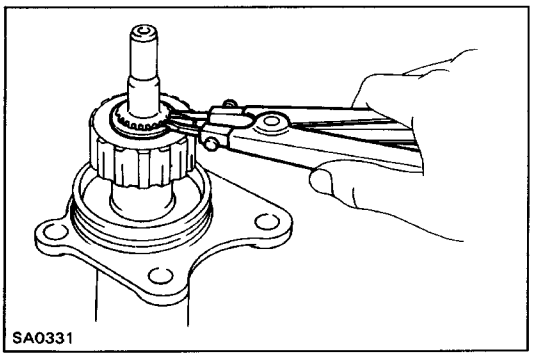

(b) Using a snap ring expander, install the snap ring.

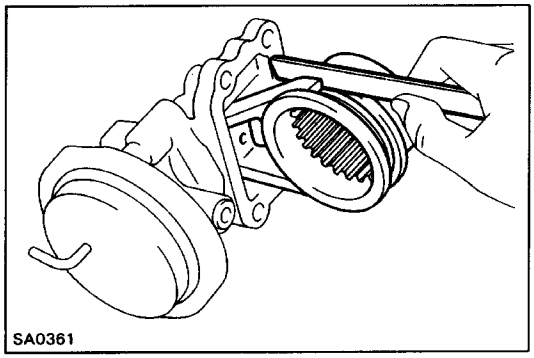

INSPECTION AND REPLACEMENT OF ACTUATOR

1. MEASURE CLEARANCE OF SLEEVE FORK AND CLUTCH SLEEVE

Using a feeler gauge, measure the clearance between the sleeve fork and clutch sleeve.

Maximum clearance: 0.35 mm (0.0138 in.)

If the clearance exceeds the limit, replace the fork or sleeve.

2. INSPECT A.D.D. ACTUATOR

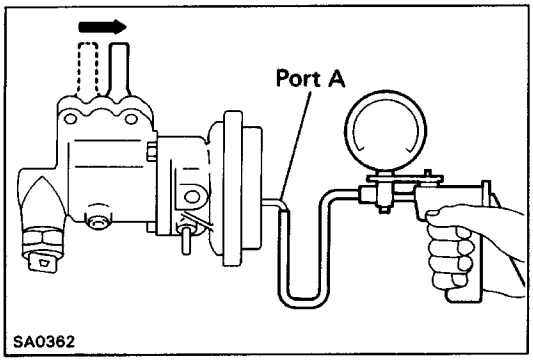

(a) Check that the sleeve fork moves to the actuator side when a vacuum of 500 mmHg (19.69 in.Hg, 66.7 kPa) is applied to port A. Also check that the vacuum does not leak.

If not, replace the actuator.

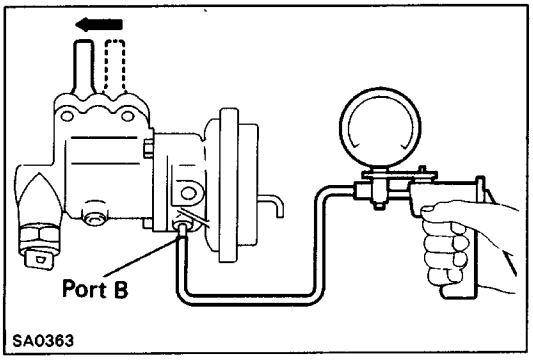

(b) Check that the sleeve fork moves away from the ac–tuator when a vacuum of 500 mmHg (19.69 in.Hg, 66.7 kPa) is applied to port B. Also check that the vacuum does not leak.

If not, replace the actuator.

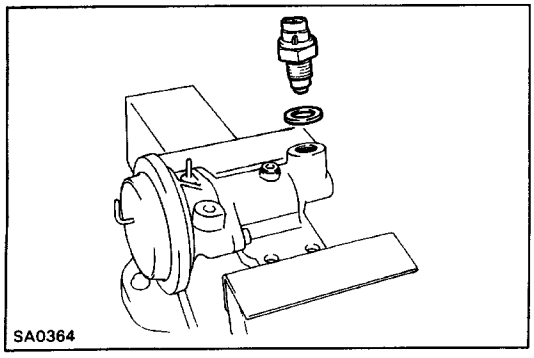

3. REMOVE A.D.D. INDICATOR SWITCH

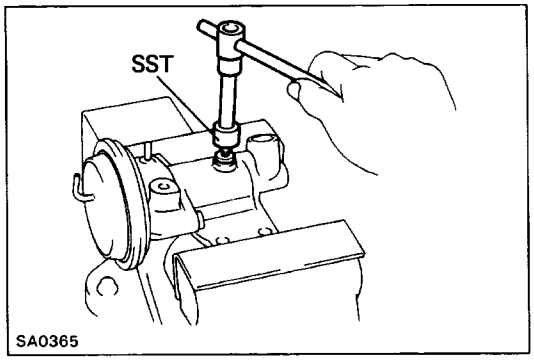

4. REMOVE SLEEVE FORK PIN

(a) Using SST, remove the screw plug.
SST 09313–30021

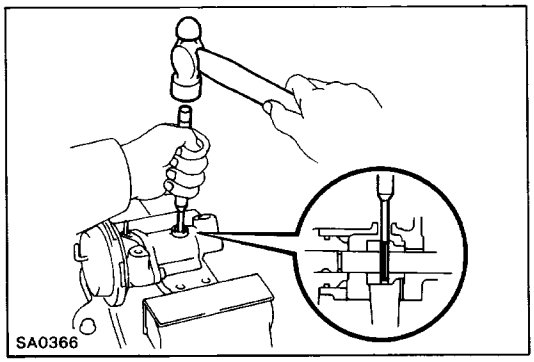

(b) Using a hammer and punch, drive out the pin through the hole of clutch case cover.

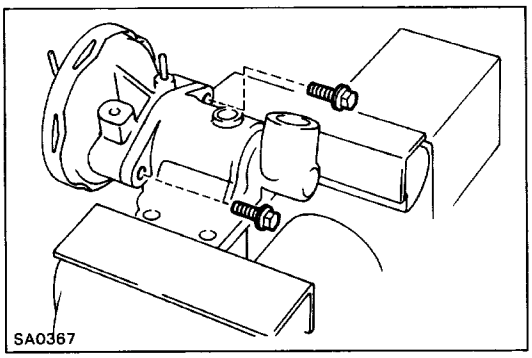

5. SEPARATE ACTUATOR FROM CLUTCH CASE COVER AND REMOVE SLEEVE FORK

(a) Remove the two bolts.

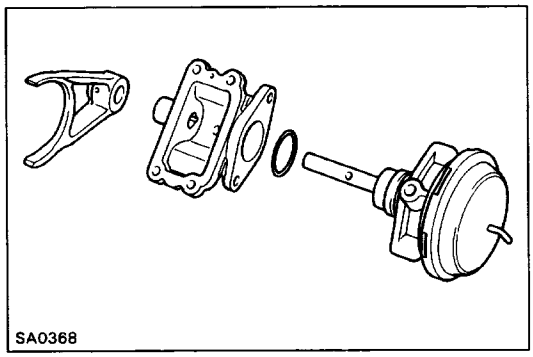

(b) Separate the actuator from clutch case cover anc remove the sleeve fork.
(c) Remove the O–ring from actuator.

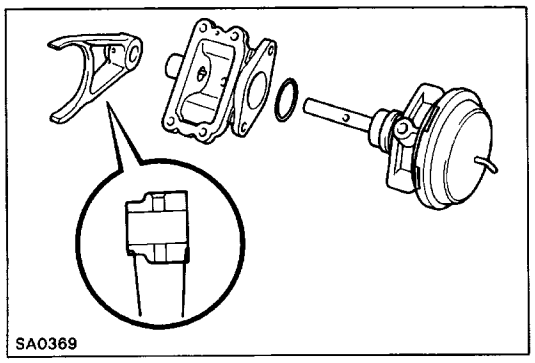

6. INSTALL SLEEVE FORK AND ACTUATOR INTO CLUTCH CASE COVER

(a) Install a new 0–ring to the actuator.
(b) Coat the 0–ring with MP grease.
(c) Place the sleeve fork and install the actuator to the clutch case cover.

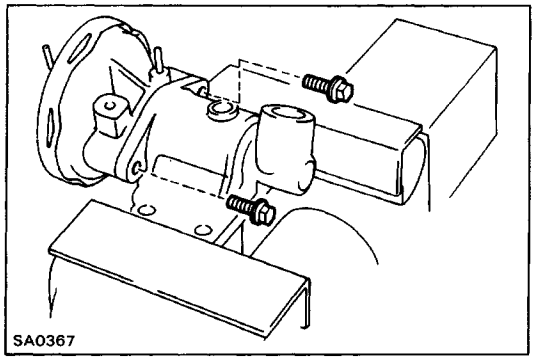

(d) Tighten the two bolts.
Torque: 21 N–m (210 kgf–cm, 15 ft–lbf)

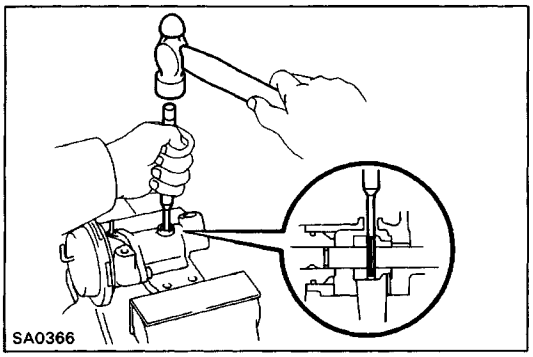

7. INSTALL SLEEVE FORK PIN

(a) Using a hammer and punch, drive in the pin through the hole of clutch case cover.

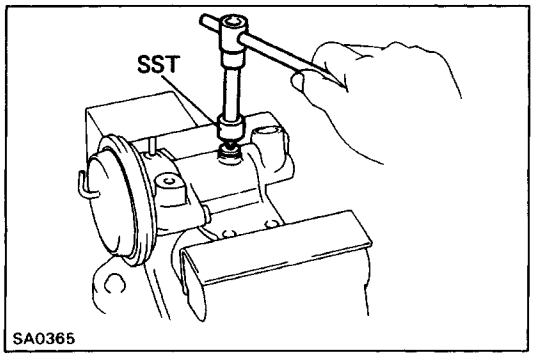

(b) Coat the threads of screw plug with sealer.
Sealer: Part No. 08826–00090, THREE BOND 1281 or equivalent

(c) Using SST, install the screw plug.
Torque: 20 N–m (200 kgf–cm, 14 ft–lbf)
SST 09313–30021

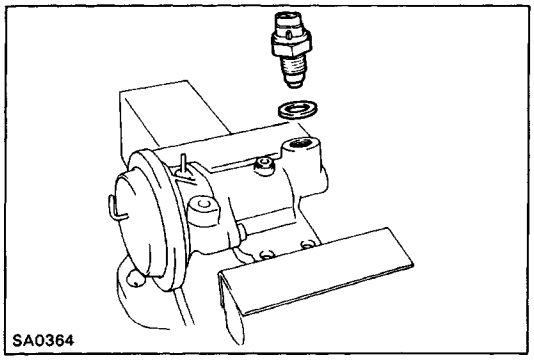

8. INSTALL A.D.

D. INDICATOR SWITCH

Install a new gasket and indicator switch.
Torque: 40 N–m (410 kgf–cm, 30 ft–lbf)

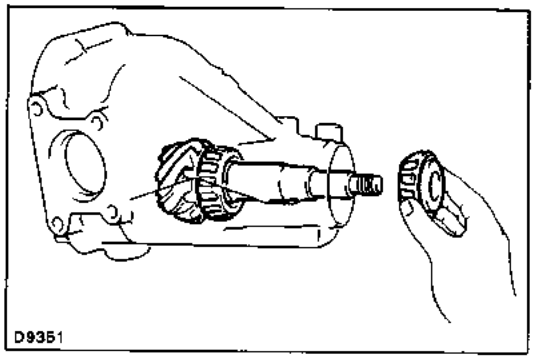

ASSEMBLY OF DIFFERENTIAL

(See page SA–83)

1. TEMPORARILY ADJUST DRIVE PINION PRELOAD

(a) Install the following parts.

- Drive pinion
- Front bearing

HINT: Assemble the spacer and oil seal after adjusting the gear contact pattern.

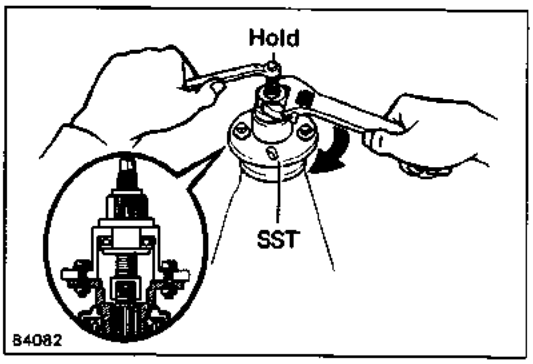

(b) Install the companion flange with SST.
Coat the threads of the nut with MP grease.
SST 09557–22022 (09557–22030)

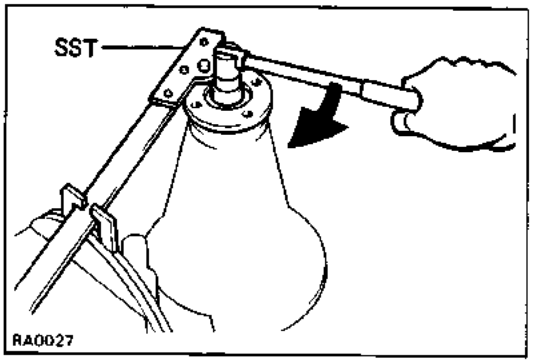

(c) Adjust the drive pinion preload by tightening the companion flange nut.
Using SST to hold the flange, tighten the nut.
SST 09330–00021

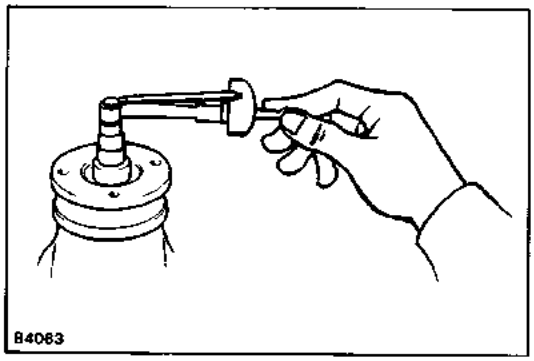

(d) Using a torque meter, measure the preload.

Preload (starting):

New bearing

1.2 – 1.9 N–m

(12 – 19 kgf–cm, 10.4 – 16.5 in.–lbf)

Reused bearing

0.6 – 1.0 N–m

(6 – 10 kgf–cm, 5.2 – 8.7 in.–lbf)

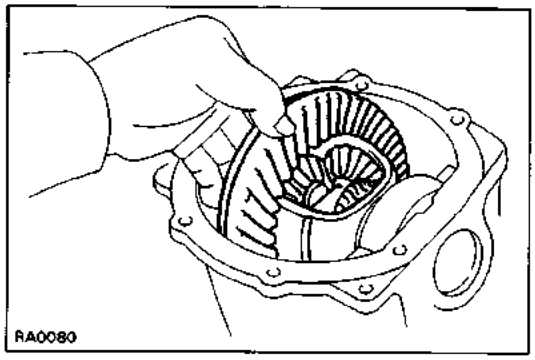

2. INSTALL DIFFERENTIAL CASE IN CARRIER

(a) Place the bearing outer races on their respective bearings. Make sure the left and right outer races are not interchanged.

(b) Install the differential case in the carrier.

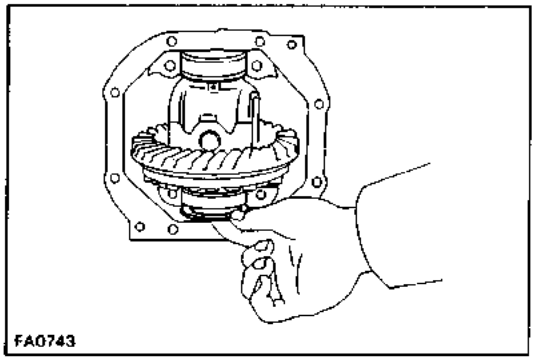

3. ADJUST RING GEAR BACKLASH

(a) Install only the plate washer on the ring gear back side.
HINT: Insure that the ring gear has backlash.

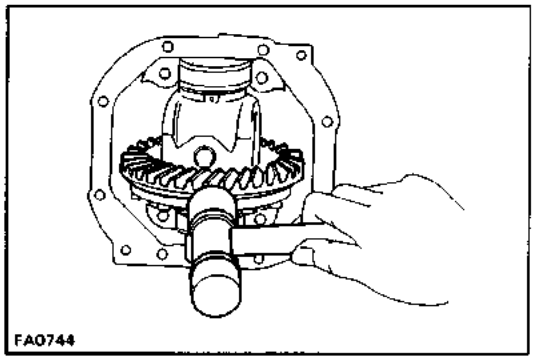

(b) Snug down the washer and bearing by tapping on the ring gear with a plastic–faced hammer.

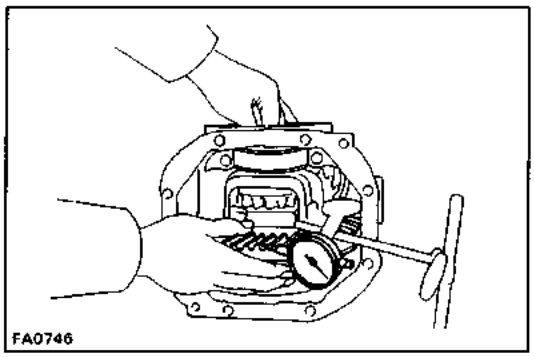

(c) Hold the side bearing boss on the teeth surface of the ring gear and measure the backlash.
Backlash (reference): 0.13 mm (0.0051 in.)

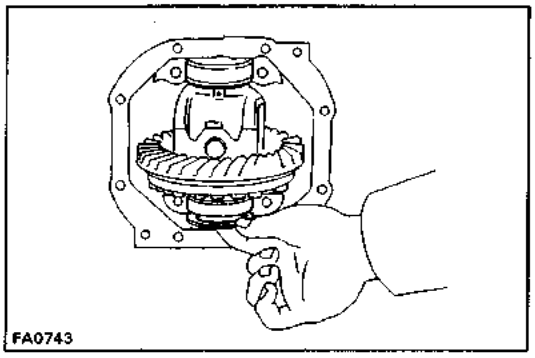

(d) Select a ring gear back plate washer, using the backlash as reference. (See page SA–99)

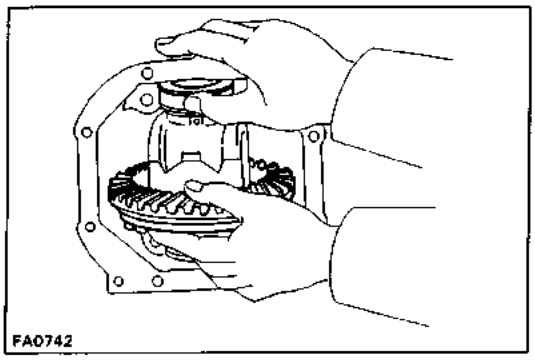

(e) Select a ring gear teeth side washer with a thickness which eliminates any clearance between the outer race and case.

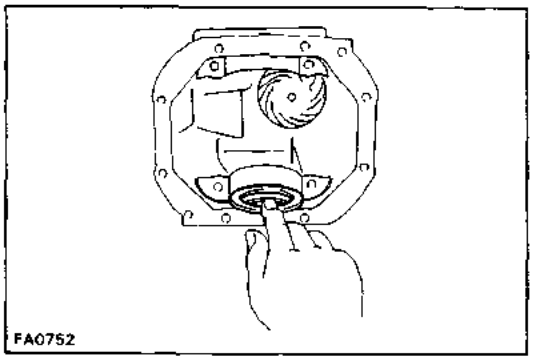

(f) Remove the plate washers and differential case.
(g) Install the plate washer into the lower part of the carrier.

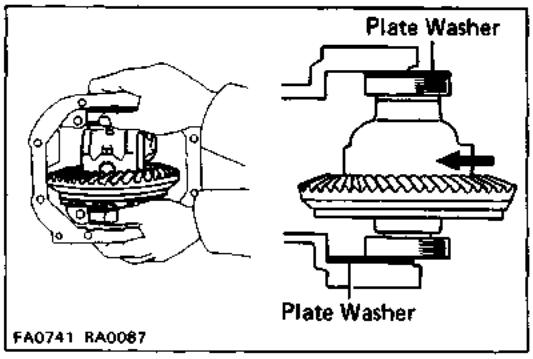

(h) Place the other plate washer onto the differential case together with the outer race, and install the dif–ferential case with the outer race into the carrier.

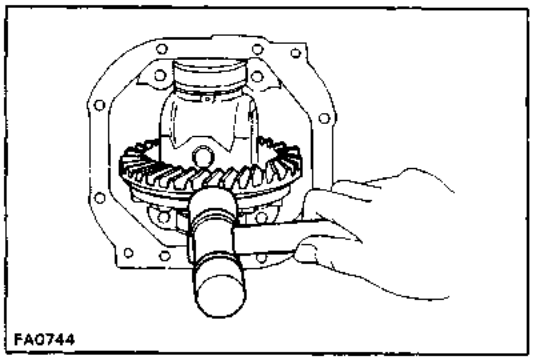

(i) Using a plastic–faced hammer, snug down the washer and bearing by tapping the ring gear.

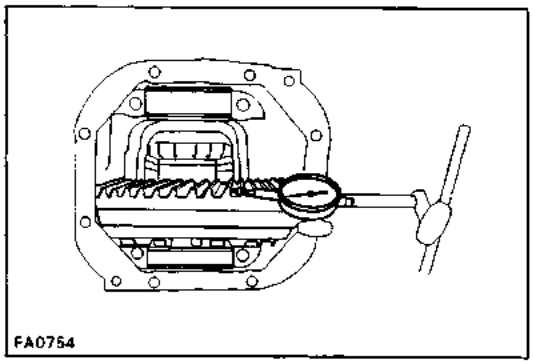

(j) Using a dial indicator, measure the ring gear back–lash.
Backlash: 0.13 – 0.18 mm (0.0051 – 0.0071 in.)

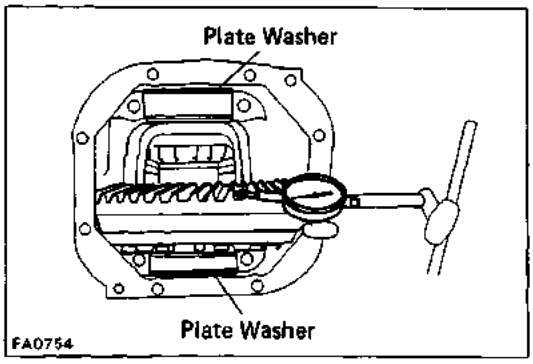

(k) If not within specification, adjust by either increas–ing or decreasing the number of washers on both sides by an equal amount.
HINT: There should be no clearance between the plate washer and case.
Insure that there is ring gear backlash.

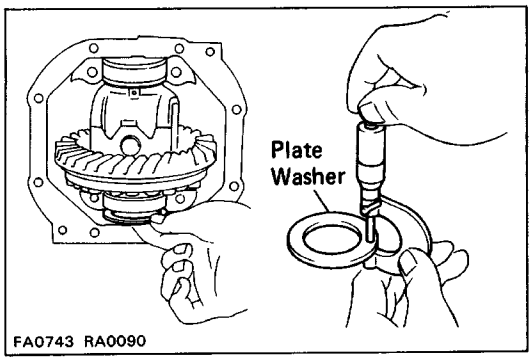

4. ADJUST SIDE BEARING PRELOAD

(a) Remove the ring gear teeth plate washer and measure the thickness.

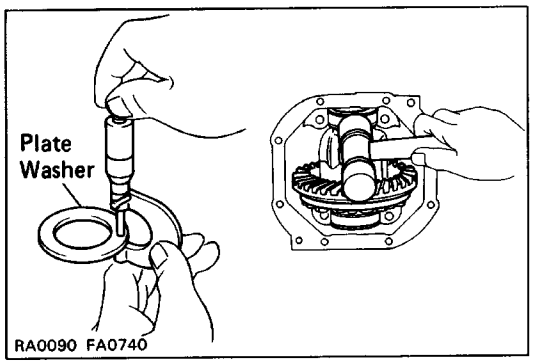

(b) Using the backlash as a reference, install a new washer of 0.06 – 0.09 mm (0.0024 – 0.0035 in.) thicker than the washer removed.
HINT: Select a washer which can be pressed in 2/3 of the way with your finger.

(c) Using a plastic–faced hammer, tap in the side washer.

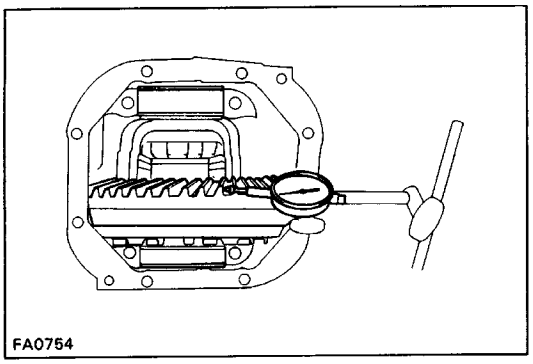

(d) Recheck the ring gear backlash.
Backlash: 0.13 – 0.18 mm (0.0051 – 0.0071 in.)

(e) If not within standard, adjust by either increasing or decreasing the washers on both sides by an equal amount.
HINT: The backlash will change about 0.02 mm (0.0008 in.) with 0.03 mm (o.0012 in.) alteration of the side washer.

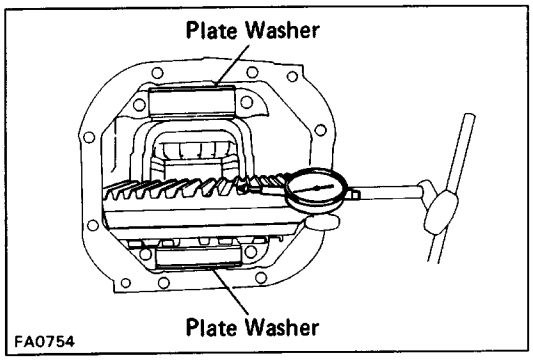

Washer thickness

Thickness mm (in.)	
2.57 – 2.59 (0.1012 – 0.1020)	2.93 – 2.95 (0.1154 – 0.1161)
2.60 – 2.62 (0.1024 – 0.1031)	2.96 – 2.98 (0.1165 – 0.1173)
2.63 – 2.65 (0.1035 – 0.1043)	2.99 – 3.01 (0.1177 – 0.1185)
2.66 – 2.68 (0.1047 – 0.1055)	3.02 – 3.04 (0.1189 – 0.1197)
2.69 – 2.71 (0.1059 – 0.1067)	3.05 – 3.07 (0.1201 – 0.1209)
2.72 – 2.74 (0.1071 – 0.1079)	3.08 – 3.10 (0.1213 – 0.1220)
2.75 – 2.77 (0.1083 – 0.1091)	3.11 – 3.13 (0.1224 – 0.1232)
2.78 – 2.80 (0.1094 – 0.1102)	3.14 – 3.16 (0.1236 – 0.1244)
2.81 – 2.83 (0.1106 – 0.1114)	3.17 – 3.19 (0.1248 – 0.1256)
2.84 – 2.86 (0.1118 – 0.1126)	3.20 – 3.22 (0.1260 – 0.1268)
2.87 – 2.89 (0.1130 – 0.1138)	3.23 – 3.25 (0.1272 – 0.1280)
2.90 – 2.92 (0.1142 – 0.1150)	

5. INSTALL SIDE BEARING CAPS

Align the matchmarks on the cap and carrier.
Torque: 78 N–m (800 kgf–cm, 58 ft–lbf)

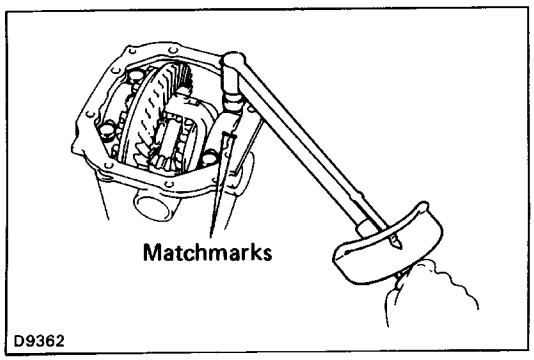

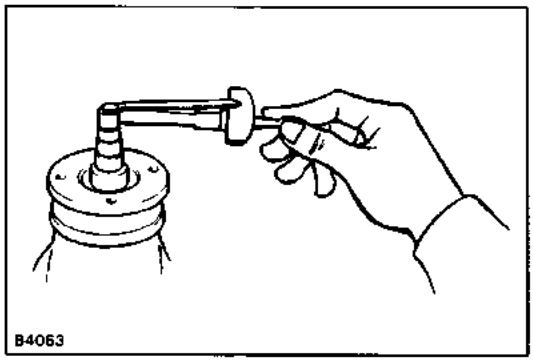

6. MEASURE TOTAL PRELOAD

Using a torque wrench, measure the total preload.

Total preload (starting):

Add drive pinion preload

0.4 – 0.6 N–m (4 – 6 kgf–cm, 3.5 – 5.2 in.–lbf)

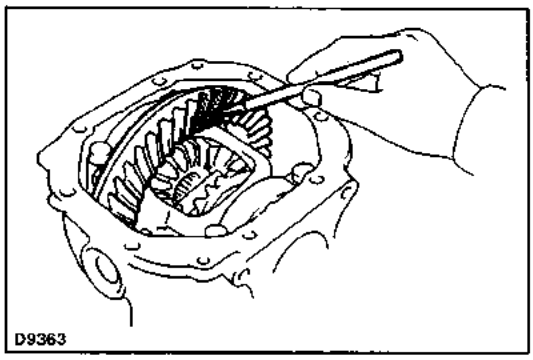

7. INSPECT TOOTH CONTACT BETWEEN RING GEAR AND DRIVE PINION

(a) Coat 3 or 4 teeth at three different positions on the ring gear with red lead.

(b) Hold the companion flange firmly and rotate the ring gear in both directions.

(c) Inspect the tooth pattern.

If the teeth are not contacting properly, use the following chart to select a proper washer for correction.

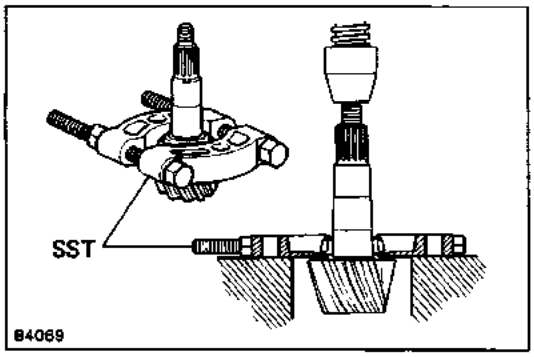

Washer thickness

Thickness mm (in.)	
2.24 (0.0882)	2.51 (0.0988)
2.27 (0.0894)	2.54 (0.1000)
2.30 (0.0906)	2.57 (0.1012)
2.33 (0.0917)	2.60 (0.1024)
2.36 (0.0929)	2.63 (0.1035)
2.39 (0.0941)	2.66 (0.1047)
2.42 (0.0953)	2.69 (0.1059)
2.45 (0.0965)	2.72 (0.1071)
2.48 (0.0976)	

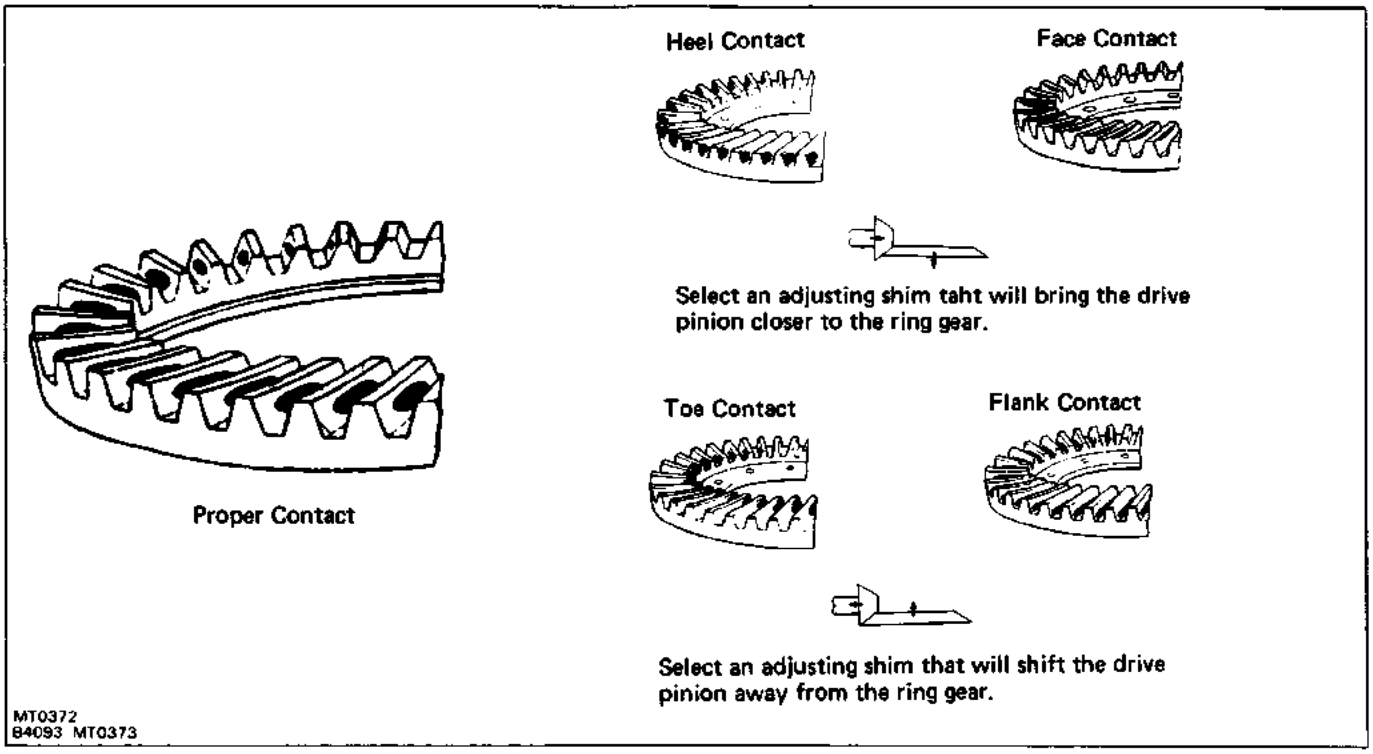

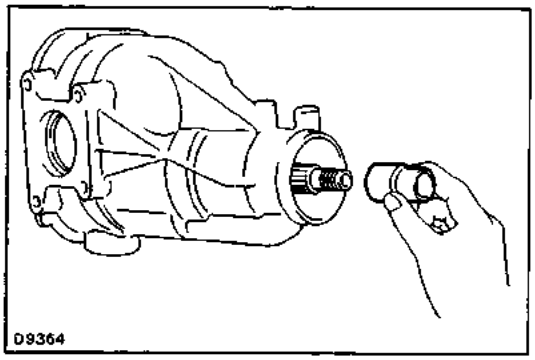

8. REMOVE COMPANION FLANGE

(See step 14 on page SA–86)

9. REMOVE FRONT BEARING

(See step 16 on page SA–86)

10. INSTALL NEW BEARING SPACER AND FRONT BEARING

(a) Install a new bearing spacer on the drive pinion.

(b) Install the front bearing on the drive pinion.

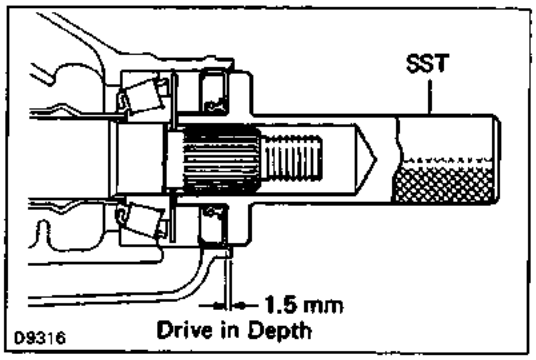

11. INSTALL OIL SLINGER AND NEW OIL SEAL

(a) Install the oil slinger.

(b) Using SST, drive in a new oil seal.

SST 09554–30011

Oil seal drive in depth: 1.5 mm (0.059 in.)

(c) Apply MP grease to the oil seal lip.

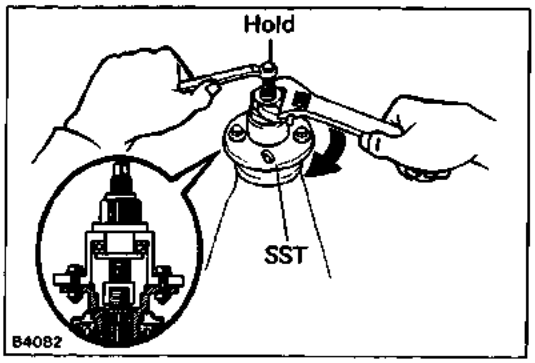

12. INSTALL COMPANION FLANGE

(a) Using SST, install the companion flange on the shaft.

SST 09557–22022 (09557–22030)

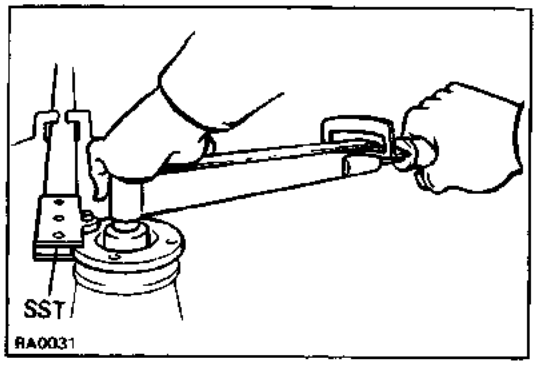

(b) Coat the threads of a new nut with MP grease.

(c) Using SST to hold the flange, tighten the nut.

Torque the nut.

SST 09330–00021

Torque: 120 N–m (1,225 kgf–cm, 89 ft–lbf)

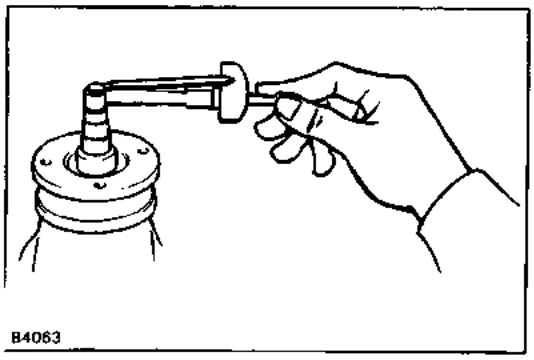

13. CHECK FRONT BEARING PRELOAD

Using a torque meter, measure the preload of the back–lash between the drive pinion and ring gear.

Preload (starting):

New bearing

1.2 – 1.9 N–m

(12 – 19 kgf–cm, 10.4 – 16.5 ft–lbf)

Reused bearing

0.6 – 1.0 N–m

(6 – 10 kgf–cm, 5.2 – 8.7 ft–lbf)

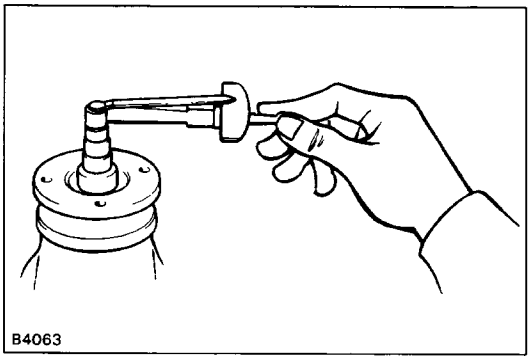

(a) If the preload is greater than specification, replace the bearing spacer.
(b) If the preload is less than specification, retighten the nut 13 N–m (130 kgf–cm,9 ft–lbf) a little at a time until the specified preload is reached.
Maximum torque: 223 N–m (2,275 kgf–cm, 165 ft–lbf)
If the maximum torque is exceeded while retightening the nut, replace the bearing spacer and repeat the preload procedure. Do not back off the pinion nut to reduce the preload.

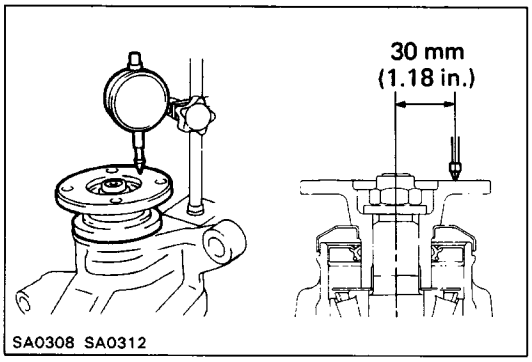

14. CHECK RUNOUT OF COMPANION FLANGE
Using a dial indicator, measure the vertical and lateral runout of the companion flange.
Maximum vertical runout: 0.10 mm (0.0039 in.)

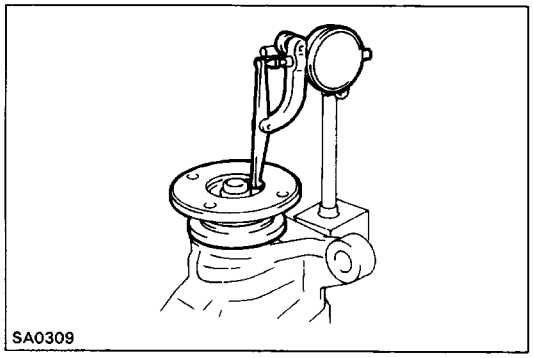

Maximum lateral runout: 0.10 mm (0.0039 in.)
If the runout is greater than maximum, inspect the bearings.

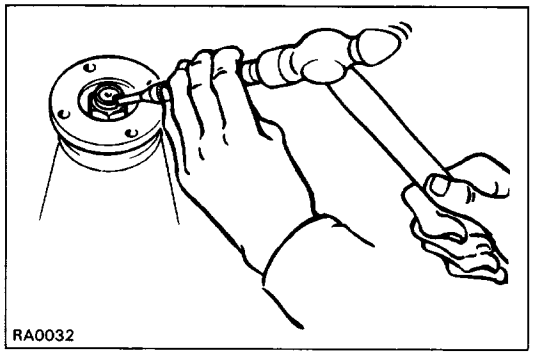

15. STAKE DRIVE PINION NUT

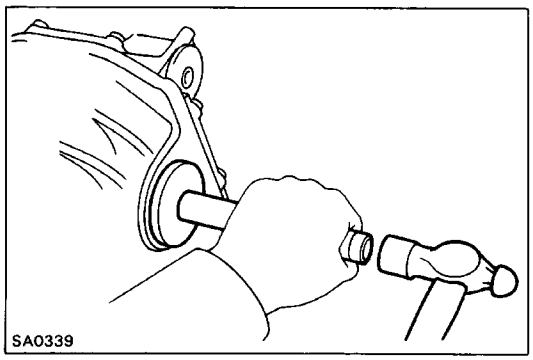

16. INSTALL NEW RH SIDE GEAR SHAFT OIL SEAL
(a) Coat the oil seal lip with MP grease.
(b) Using SST, drive in the oil seal until it is flush with the carrier end surface.
SST 09550–22011 (09550–00020, 09550–00031)

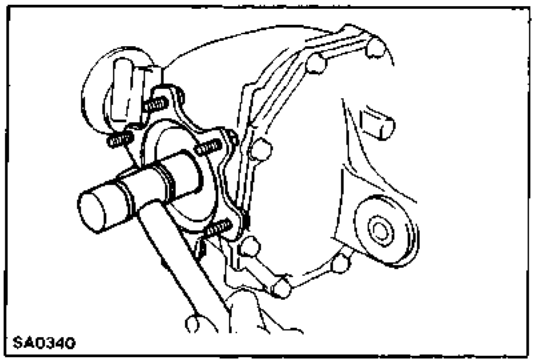

17. INSTALL RH SIDE GEAR SHAFT

(a) Install a new snap ring to the side gear shaft.

(b) Using a plastic–faced hammer, tap on the side gear shaft to install it.

18. CHECK INSTALLATION OF SIDE GEAR SHAFT

(a) Check that there is 2 – 3 mm (0.08 – 0.12 in.) of play in axial direction.

(b) Check that the side gear shaft will not come out by trying to pull it completely out by hand.

19. INSTALL INTERMEDIATE SHAFT

(a) Install a new snap ring to the shaft.

(b) Using a plastic–faced hammer, tap on the shaft to in–stall it.

20. CHECK INSTALLATION OF INTERMEDIATE SHAFT

(a) Check that there is 2 – 3 mm (0.08 – 0.12 in.) of play in axial direction.

(b) Check that the shaft will not come out by trying to pull it completely out by hand.

21. INSTALL CLUTCH CASE TO SIDE GEAR SHAFT TUBE

(a) Install a new O–ring to the tube.

(b) Coat the 0–ring with MP grease.

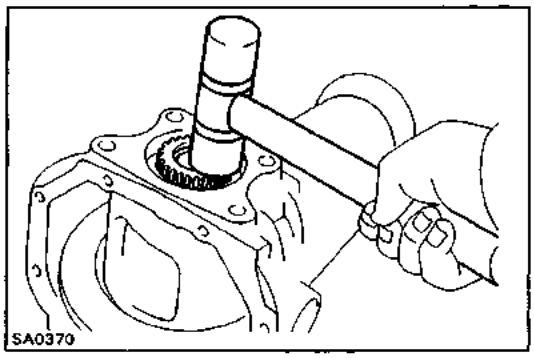

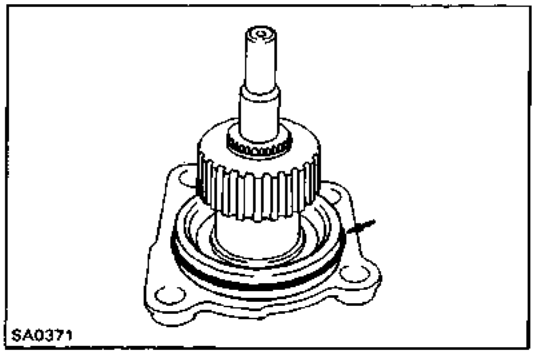

(c) Install the clutch case to the tube.

(d) Tighten the two torx bolts.

Torque: 78 N¿ m l800 kgf–cm, 58 ft¿ lbf j

Torx wrench: E14 (Part No. 09044–00010 or locally manufactured tool)

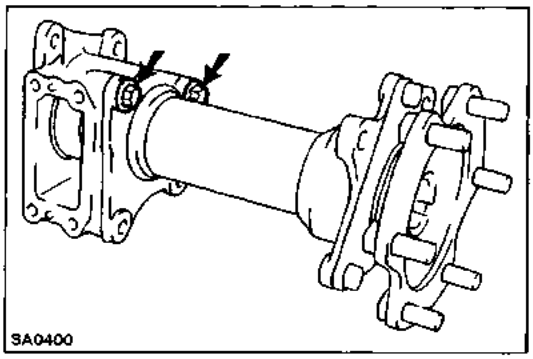

22. INSTALL CLUTCH SLEEVE

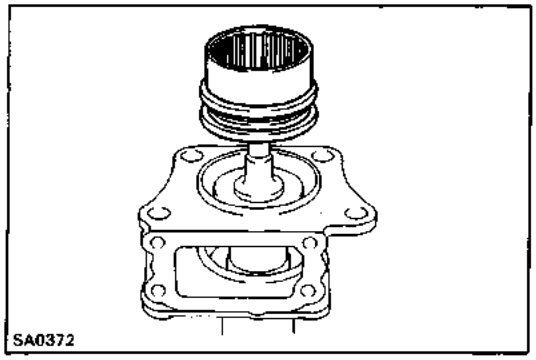

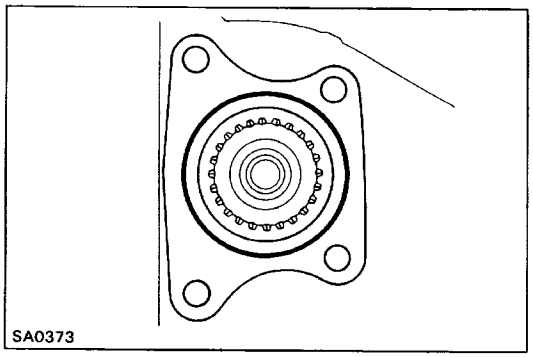

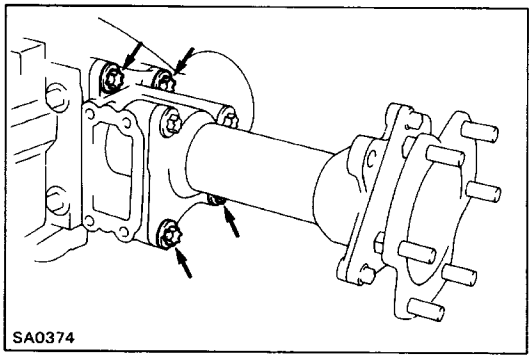

23. INSTAL LH SIDE GEAR SHAFT TO DIFFERENTIAL CARRIER

(a) Remove any packing material and be careful not to get oil on the contacting surfaces of the differential carrier and clutch case.

(b) Apply seal packing to the differential carrier as shown.

Seal packing: Part No. 08826–00090, THREE BOND 1281 or equivalent

HINT: Install the side gear shaft within ten minutes after applying seal packing.

(c) Install LH side gear shaft to the differential carrier.

W Tighten the four torx bolts.

Torque: 78 N–m (800 kgf–cm, 58 ft–lbf)

Torx wrench: E14 (Part No. 09044–00010 or locally manufactured tool)

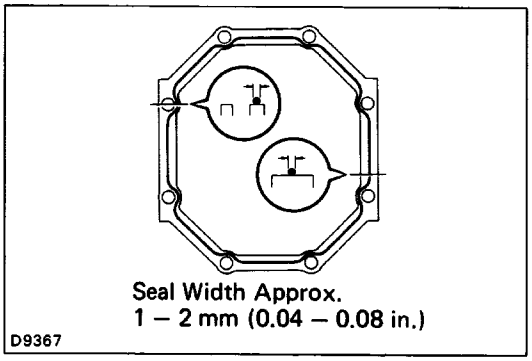

24. INSTALL DIFFERENTIAL CARRIER COVER

(a) Remove any packing material and be careful not to drop oil on the contacting surface of the differential carrier or carrier cover.

(b) Apply seal packing to the carrier cover.

Seal packing: Part No. 08826–00090, THREE BOND 1281 or equivalent

HINT: Install the carrier cover within ten minutes after applying seal packing.

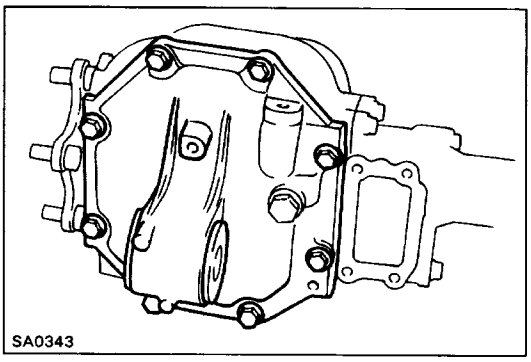

(c) Install and torque the bolts.

Torque: 47 N–m (475 kgf–cm, 34 ft–lbf)

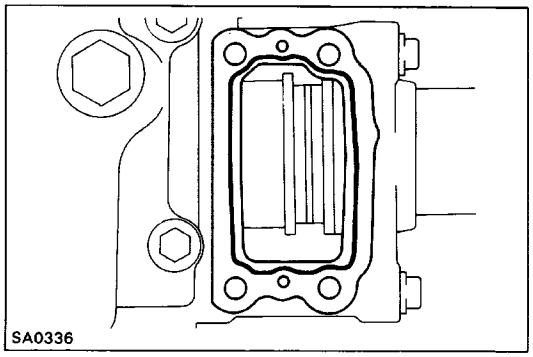

25. INSTALL ACTUATOR

(a) Remove any packing material and be careful not to get oil on the contacting surfaces of the actuator and clutch case.

(b) Apply seal packing to the clutch case as shown.

Seal packing: Part No. 08826–00090, THREE BOND 1281 or equivalent

HINT: Install the actuator within ten minutes after applying seal packing.

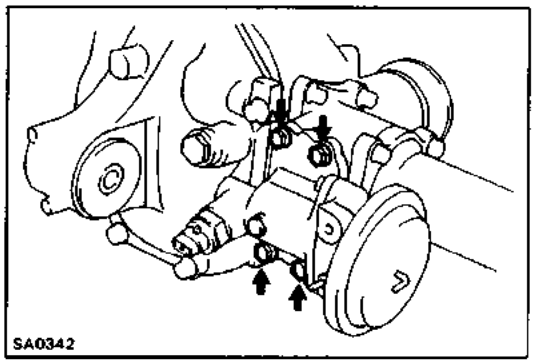

(c) Tighten the four bolts.

Torque: 21 N–m (210 kgf–cm, 15 ft–lbf)

Installation of Front Differential

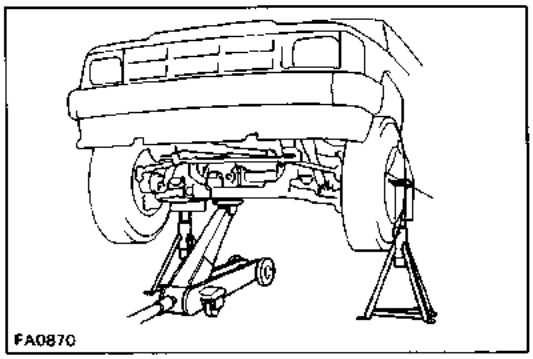

1. INSTALL FRONT DIFFERENTIAL

(a) Install the front differential to the frame, and support it with a jack.

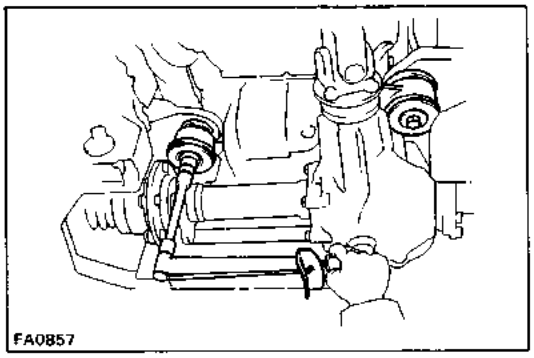

(b) Install and torque the left and right rear mounting bolts.
Torque: 167 N–m (1,700 kgf–cm, 123 ft–lbf)

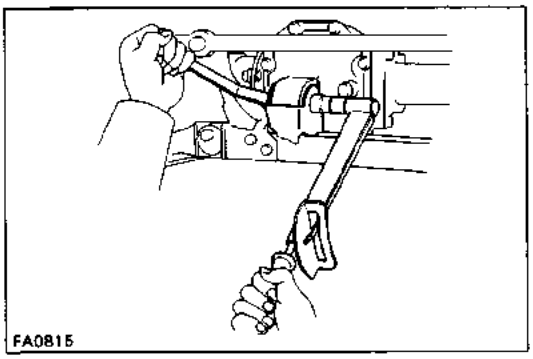

3. (wl A.D.D.)
CONNECT VACUUM HOSES AND 4WD INDICATOR SWITCH CONNECTOR

4. CONNECT DRIVE SHAFTS TO SIDE GEAR SHAFT

Connect the drive shafts to the side gear shaft, and install and torque the nuts while depressing the brake pedal.
Torque: 83 N–m (845 kgf –cm, 61 ft–lbf)

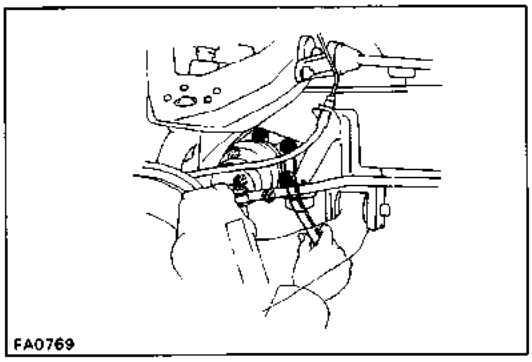

5. CONNECT PROPELLER SHAFT TO COMPANION FLANGE

(a) Align the matchmarks on the flanges and connect the flanges with four bolts and nuts.
(b) Torque the nuts.
Torque: 74 N–m (750 kgf–cm, 54 ft–lbf)

6. INSTALL DRAIN PLUG AND FILL DIFFERENTIAL WITH GEAR OIL

(wl A.D.D.)
Oil type: Toyota ”GEAR OIL SUPER” oil (Part No. 08885 – 02106) or hypoid gear oil API GL–5
Recommended oil viscosity: SAE 75W–90
Capacity: 1.86 liters (1.97 US qts, 1.64 Imp. qts)
(w/o A.D.D.)
Oil type: Hypoid gear oil API GL–5
Recommended oil viscosity:
Above – 18°C (0°F) SAE 90
Below – 18°C (0°F) SAE 80W or 80W–90
Capacity: 1.6 liters (1.7 US qts, 1.4 Imp. qts)

A.D.D. Control System

COMPONENTS

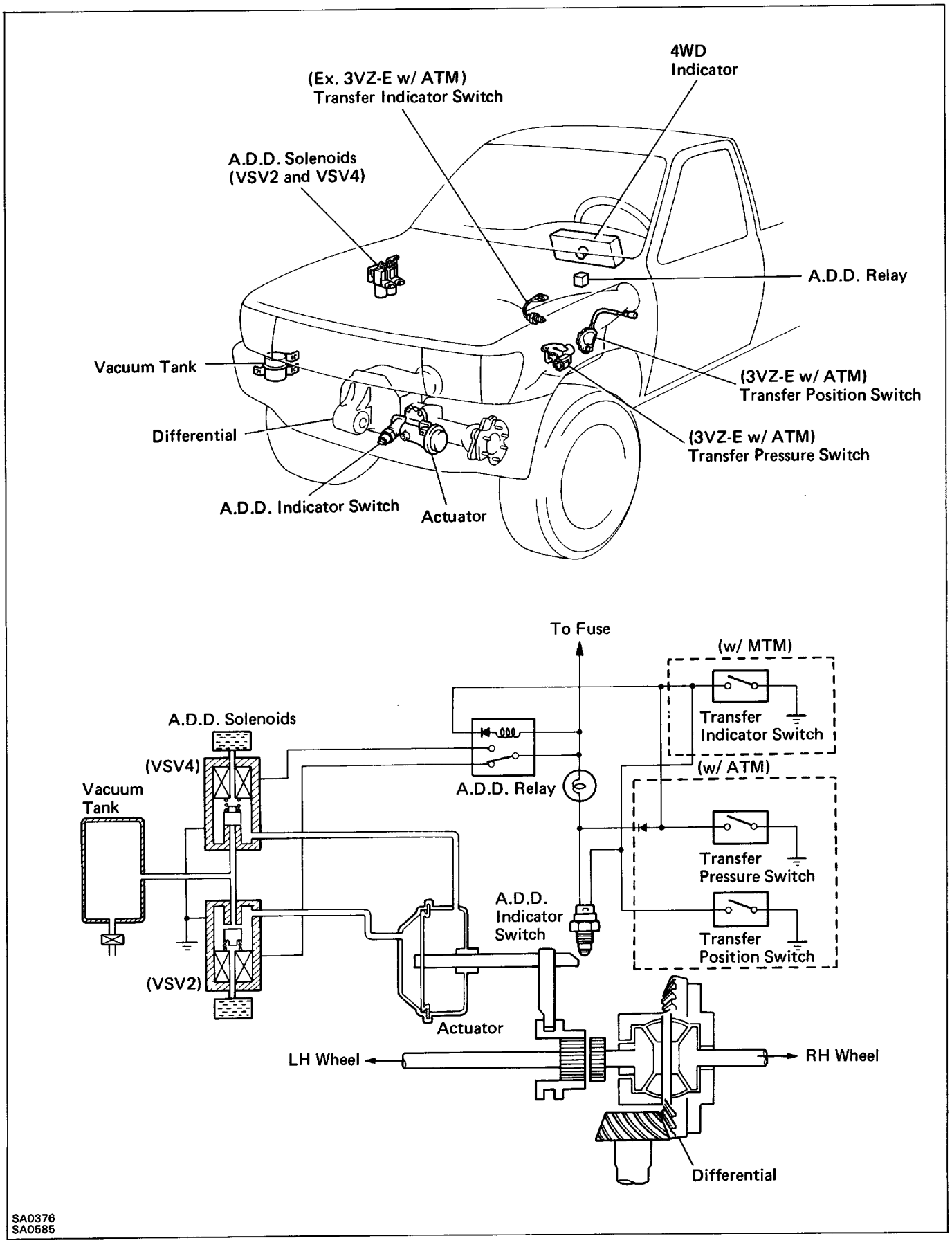

ELECTRICAL CIRCUIT

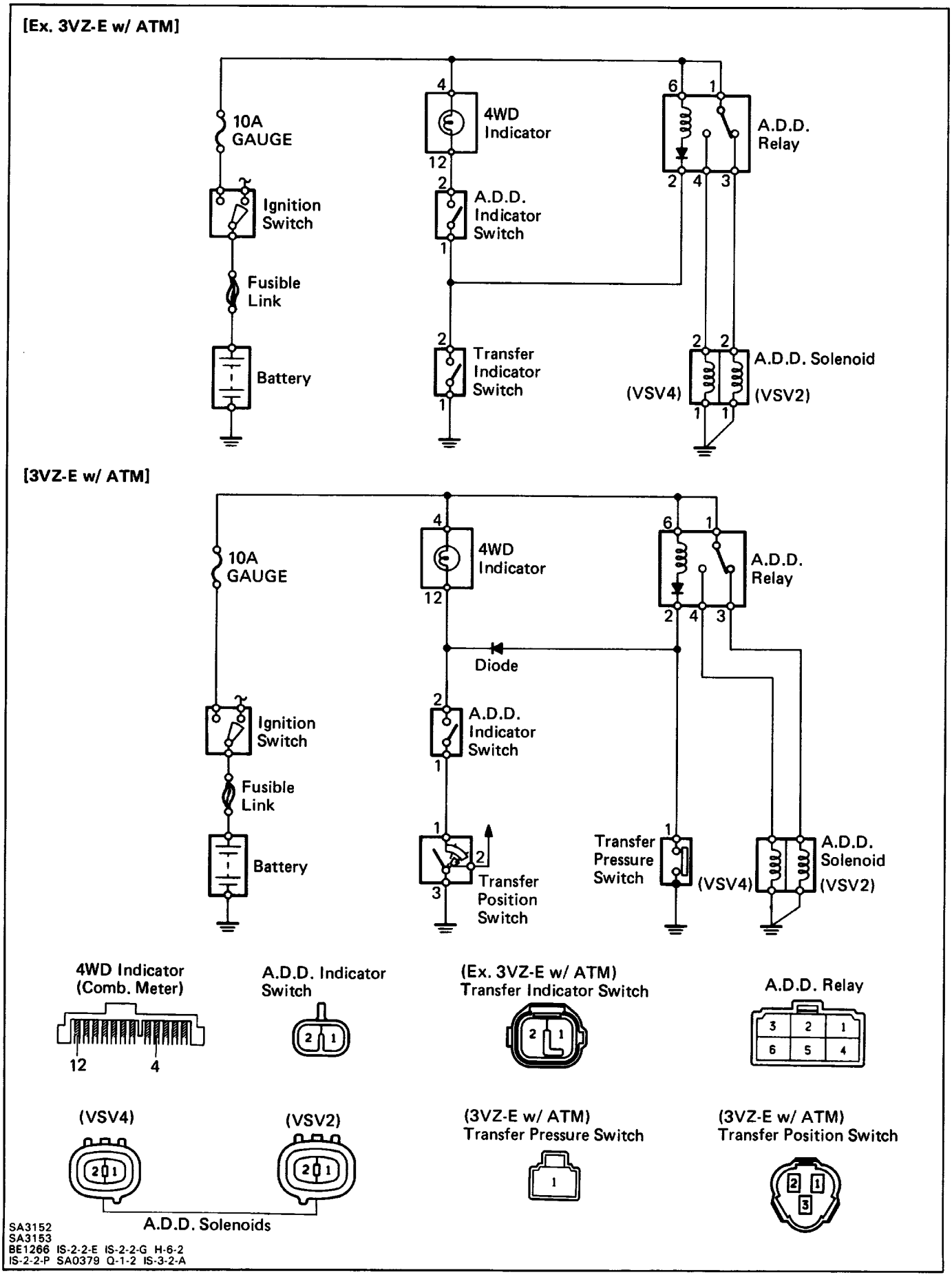

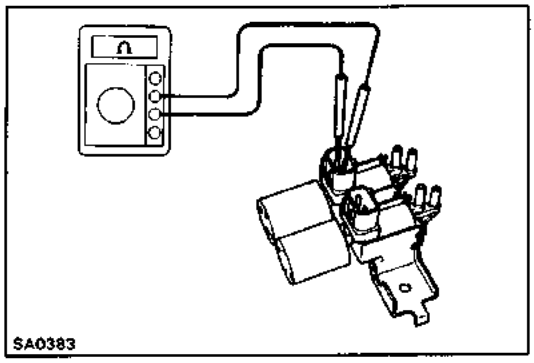

INSPECTION OF COMPONENTS

1. INSPECT A.D.

D. SOLENOIDS

(a) Measure the resistance of the solenoids.

Resistance: 37 – 44Ω

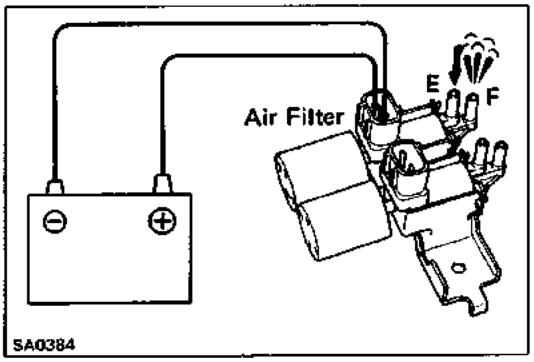

(b) Apply the battery voltage to the solenoid.

Check that air flows from port E to port F.

Check that air does not flow from port E to the air filter.

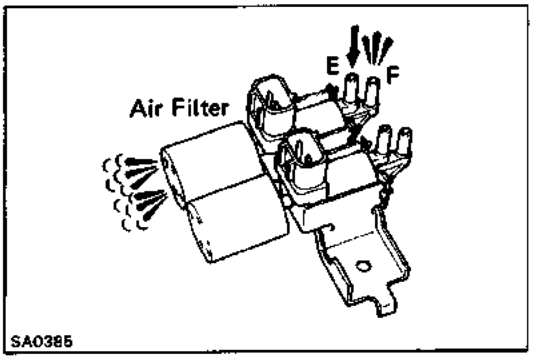

(c) Disconnect the battery voltage from the solenoid.

Check that air flows from port E to the air filter.

Check that air does not flows from port E to port F.

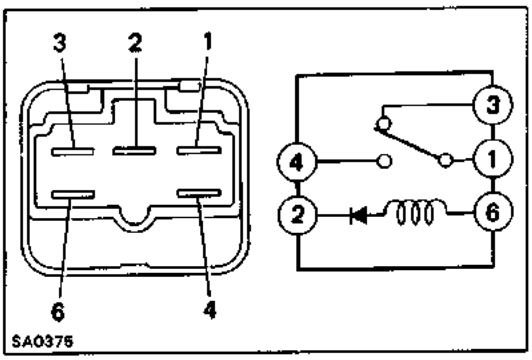

2. INSPECT A.D.D. RELAY

(Continuity)

Terminal / Condition	1	2	3	4	6
Constant	○	○	○		○
Apply battery voltage to terminals 6 and 2.	○			○	

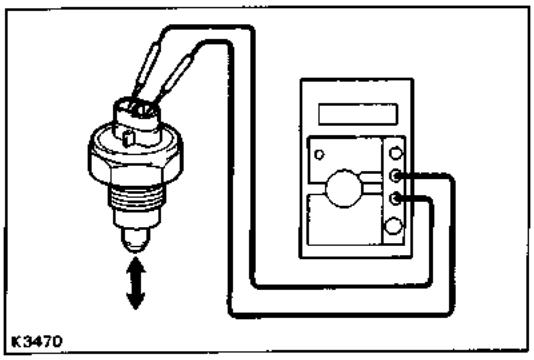

3. INSPECT A.D.

D. INDICATOR SWITCH

(a) Check that there is continuity between terminals when the switch is pushed (differential connected position).

(b) Check that there is no continuity when the switch is free (differential disconnected position).

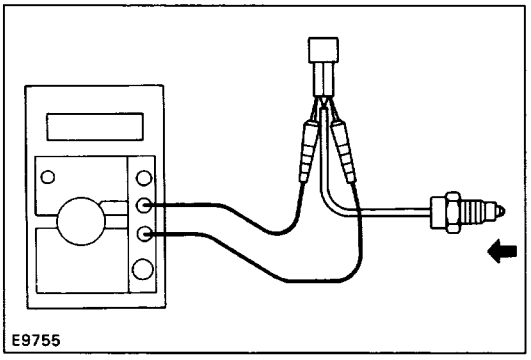

4. (Ex. 3VZ–E w/ATM)

INSPECT TRANSFER INDICATOR SWITCH

(a) Check that there is continuity between terminals when the switch is pushed (transfer 4WD position).

(b) Check that there is no continuity between terminals when the switch is free position (transfer H 2 posi–tion).

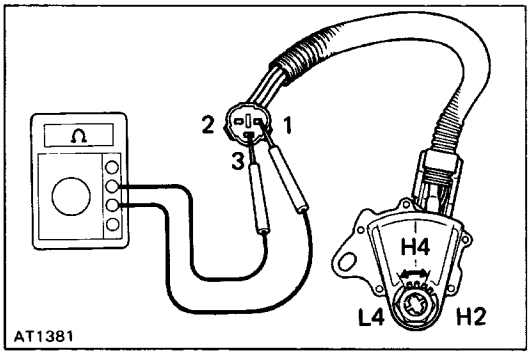

5. (3VZ–E w/ATM)

INSPECT TRANSFER POSITION SWITCH

Check that there is continuity between each terminal.

Transfer position \ Terminal	1	2	3
H4	○		○
L4	○	○	○
H2			

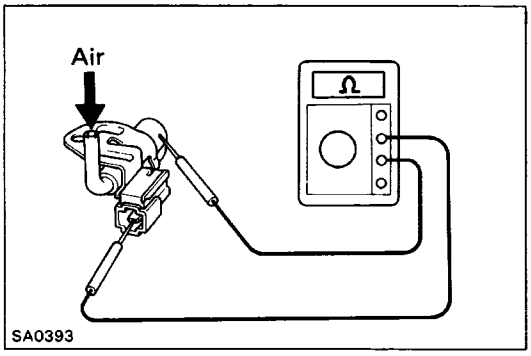

6. (3VZ–E w/ATM)

INSPECT TRANSFER PRESSURE SWITCH

While blowing compressed air (3.0 kg/cm^2, 43 psi or 294 kPa) into the switch, check the continuity between the terminal and switch body.

Resistance: 0 Ω

FRONT SUSPENSION
COMPONENTS

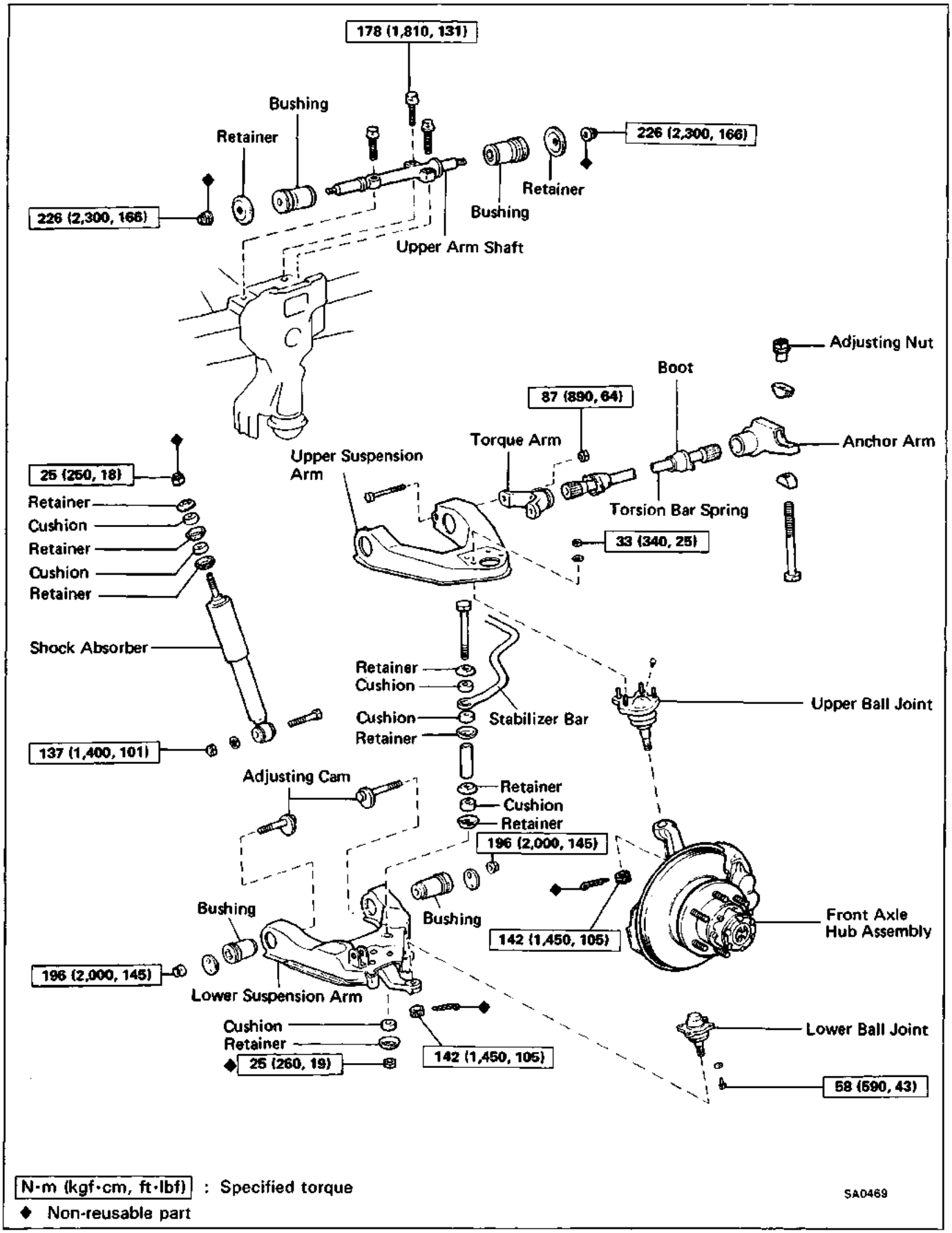

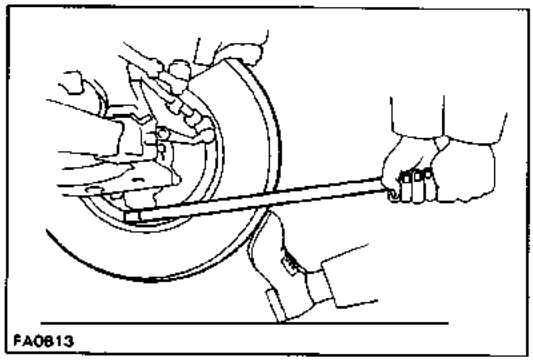

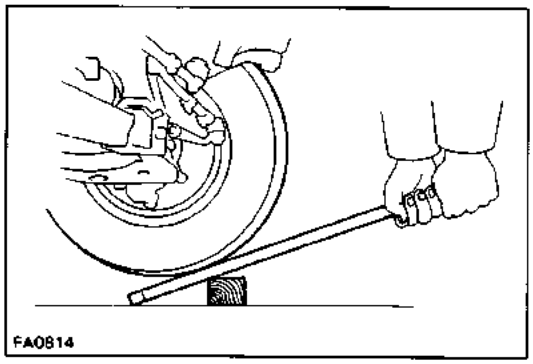

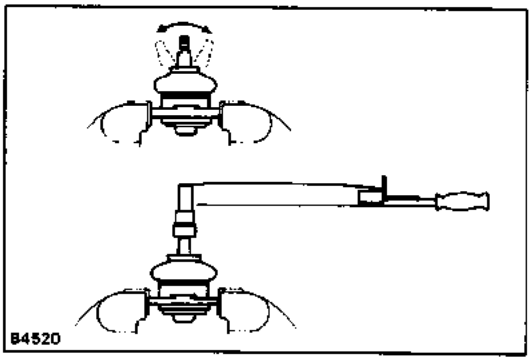

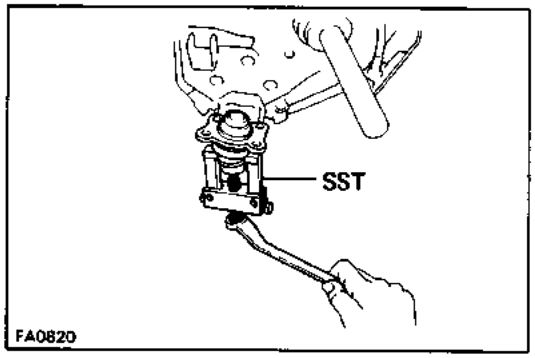

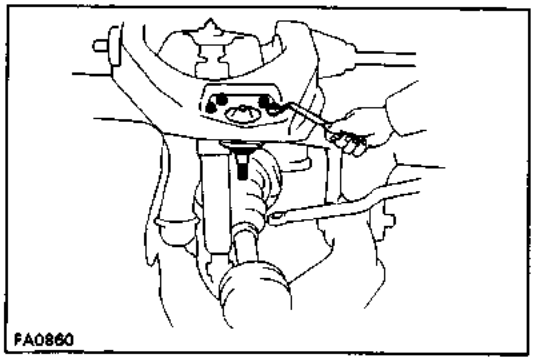

Ball Joint

(See page SA–111)

INSPECTION OF BALL JOINTS

1. INSPECT LOWER BALL JOINT FOR EXCESSIVE LOOSENESS

(a) Jack up the front of the vehicle and support it with stands.

(b) Make sure the front wheels are in a straight forward position, and depress the brake pedal.

(c) Move the lower suspension arm up and down and check that the lower ball joint has no excessive play.

Maximum vertical play: 2.3 mm (0.091 in.)

2. INSPECT UPPER BALL JOINT FOR EXCESSIVE LOOSENESS

Move the vehicle up and down and check that the upper ball joint has no excessive play.

Maximum vertical play: 0 mm (0 in.)

3. INSPECT BALL JOINT FOR ROTATION CONDITION

(a) Remove the ball joints.

(b) As shown in the figure, flip the ball joint stud back and forth 5 times before installing the nut.

(c) Using a torque gauge, turn the nut continuously one turn every 2 – 4 seconds and take the torque reading on the 5th turn.

Torque (turning):

Lower ball joint

3.0 – 5.9 N–m

(30 – 60 kgf–cm, 26 – 52 in.–lbf)

REMOVAL OF BALL JOINTS

1. REMOVE STEERING KNUCKLE

(See page SA–41)

2. REMOVE LOWER BALL JOINT FROM LOWER SUSPENSION ARM

(a) Remove the cotter pin and nut.

(b) Using SST, remove the lower ball joint from the lower suspension arm.

SST 09628–62011

3. REMOVE UPPER BALL JOINT FROM UPPER SUSPENSION ARM

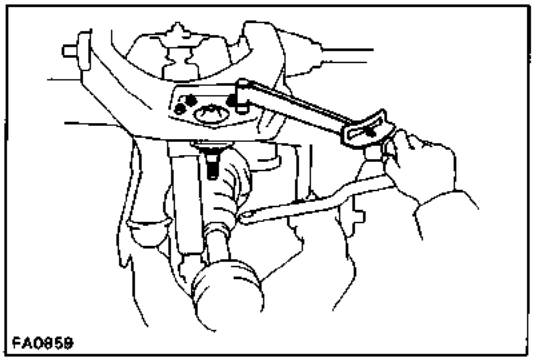

INSTALLATION OF BALL JOINTS

1. INSTALL UPPER BALL JOINT TO UPPER SUSPENSION ARM

Torque: 33 N–m (340 kgf–cm, 25 ft–lbf)

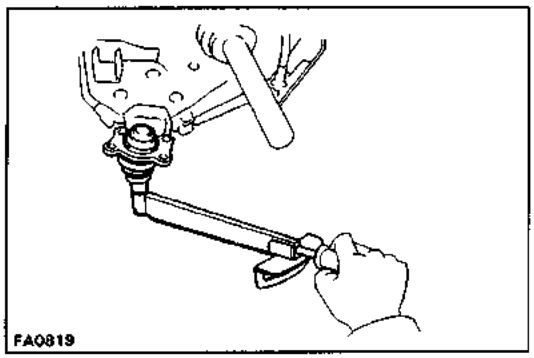

2. INSTALL LOWER BALL JOINT TO LOWER SUSPENSION ARM

(a) Install the lower ball joint to the lower suspension arm.

(b) Torque the nut and install a new cotter pin.

Torque: 142 N–m (1,450 kgf–cm, 105 ft–lbf)

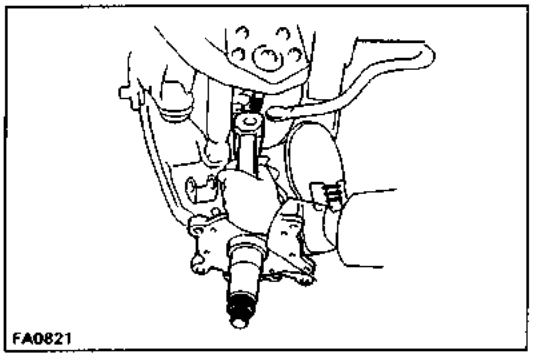

3. INSTALL STEERING KNUCKLE

(See page SA–43)

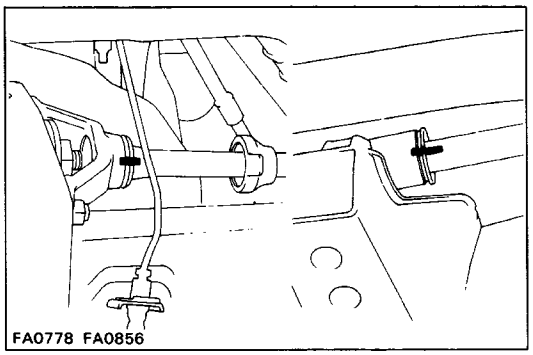

Torsion Bar Spring

(See page SA–111)

REMOVAL OF TORSION BAR SPRING

1. PLACE MATCHMARKS ON TORSION BAR SPRING, ANCHOR ARM AND TORQUE ARM

Remove the boots and place matchmarks on the torsion bar spring, anchor arm and torque arm.

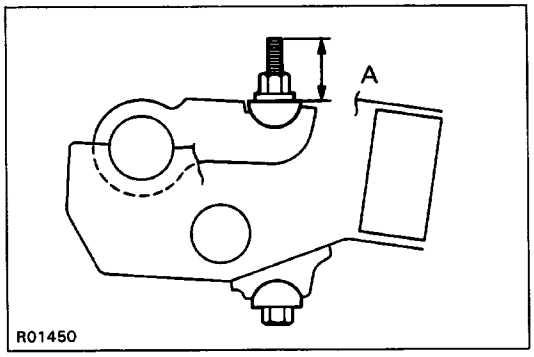

2. MEASURE PROTRUDING BOLT END ”A”, AS SHOWN

HINT: Use this measurement for reference when adjust–ing the chassis ground clearance.

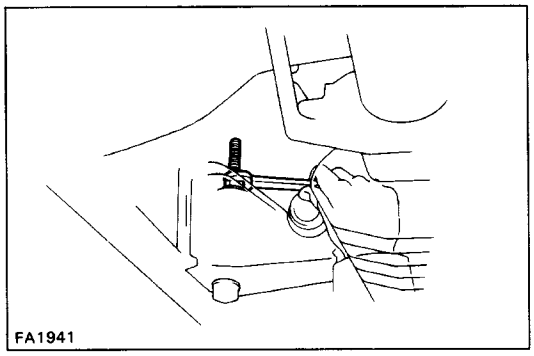

3. LOOSEN ADJUSTING NUT AND REMOVE ANCHOR ARM AND TORSION BAR SPRING

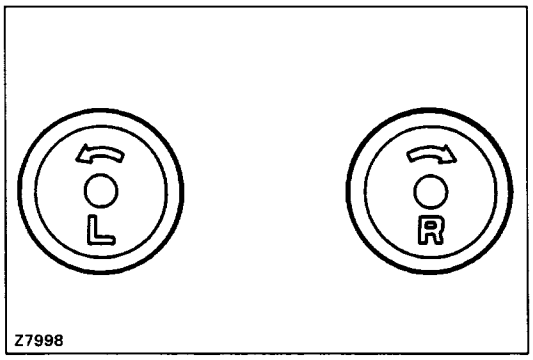

INSTALLATION OF TORSION BAR SPRING

HINT: There are left and right indication marks on the rear end of the torsion bar spring. Be careful not to inter–change them.

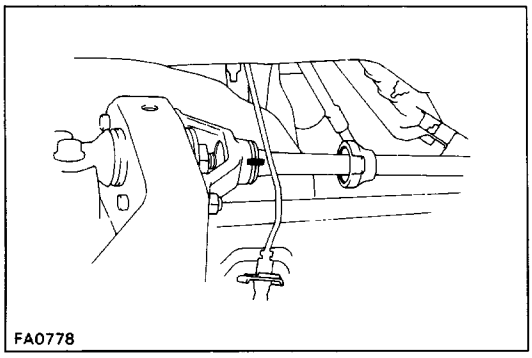

1. INSTALL TORSION BAR SPRING AND ANCHOR ARM

If Reusing Torsion Bar Spring

(a) Apply a light coat of molybdenum disulphide lithium base grease to the spline of the torsion bar spring.

(b) Align the matchmarks and install the torsion bar spring to the torque arm.

(c) Align the matchmarks and install the anchor arm tc the torsion bar spring.

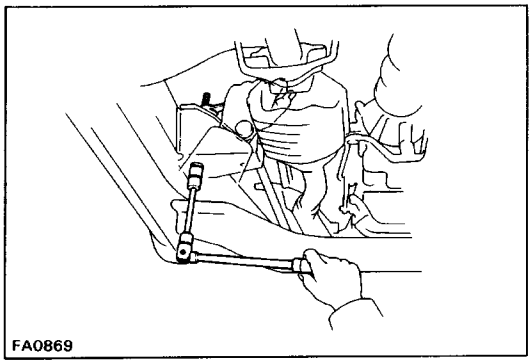

(d) Tighten the adjusting nut so that the bolt protrusion is equal to that before removal.

If Using a New Torsion Bar Spring

(a) Remove the wheel.
(b) Install the two boots to the torsion bar spring.
(c) Apply a light coat of the molybdenum disulphide lithium base grease to the spline of the torsion bar spring.
(d) Temporarily install the anchor arm to the small end of the torsion bar spring and place the matchmarks on the torsion bar spring and anchor arm.
HINT:

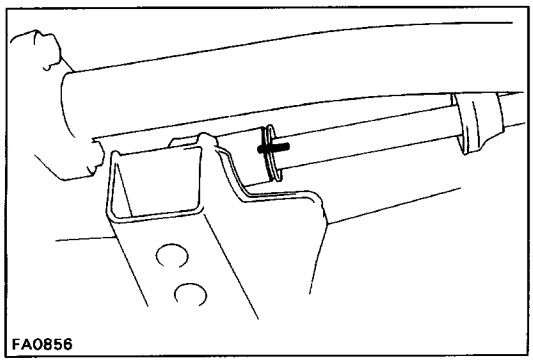

- There is one spline on the torsion bar spring that is larger than the others. Install the torsion bar spring into the anchor arm by slowly turning the anchor arm until you feel the large spline enter the matching point in the anchor arm.
- Place matchmarks on the torsion bar spring and anchor arm on the bottom of each.

(e) Remove the anchor arm from the torsion bar spring.
(f) Install the torsion bar spring into the torque arm.

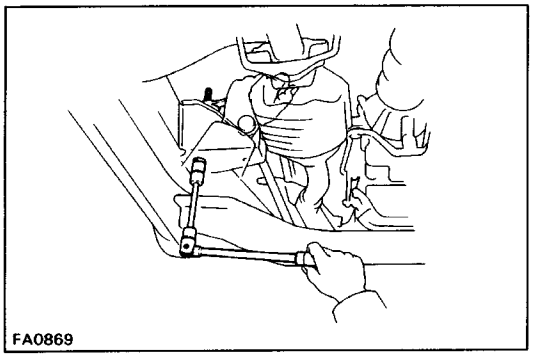

HINT: There is one spline on the torsion bar spring that is larger than the others. Install the torsion bar spring into the torque arm by slowly turning the torsion bar spring until you feel the large spline enter the matching point in the torque arm.
(g) Align the matchmarks and install the anchor arm to the torsion bar spring.
(h) Torque the adjusting nut.
Nut tightening limit: A = 70 mm (2.76 in.)
(i) Temporarily install the lock nut.
(j) Install the wheel and remove the stands, bounce the vehicle to settle the suspension.
(k1 Adjust the chassis ground clearance by turning the adjusting nut.
Chassis ground clearance: See pages A–25, 26

2. ASSEMBLE BOOTS

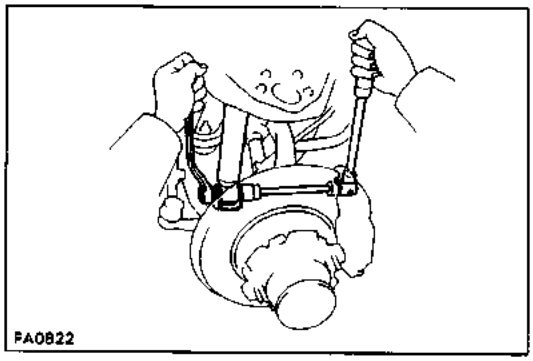

Lower Suspension Arm and Shock Absorber

(See page SA–111)

REMOVAL OF LOWER SUSPENSION ARM AND SHOCK ABSORBER

1. REMOVE SHOCK ABSORBER

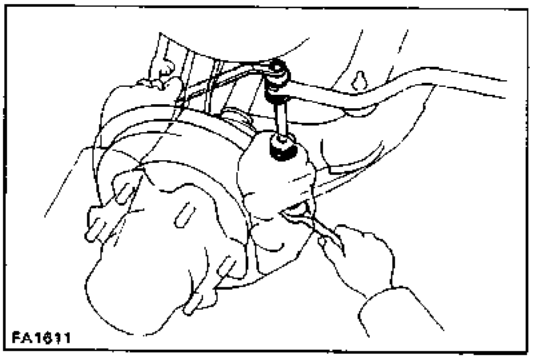

2. DISCONNECT STABILIZER BAR FROM LOWER SUSPENSION ARM

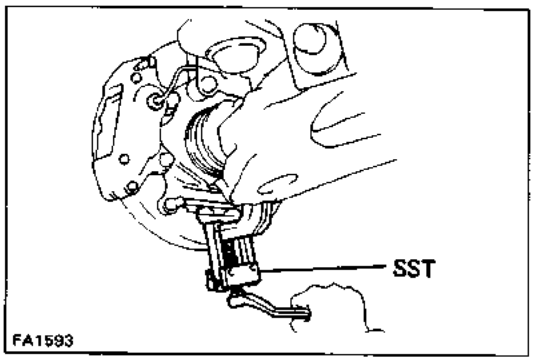

3. DISCONNECT LOWER SUSPENSION ARM FROM LOWER BALL JOINT

(a) Remove the cotter pin and loosen the nut.

(b) Using SST, disconnect the lower suspension arm from the lower ball joint.
SST 09628–62011

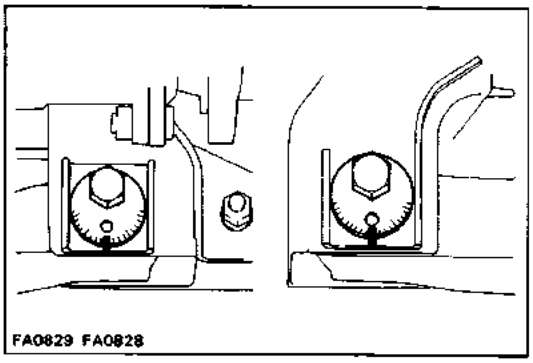

4. REMOVE LOWER SUSPENSION ARM

(a) Place matchmarks on the front and rear adjusting cams.

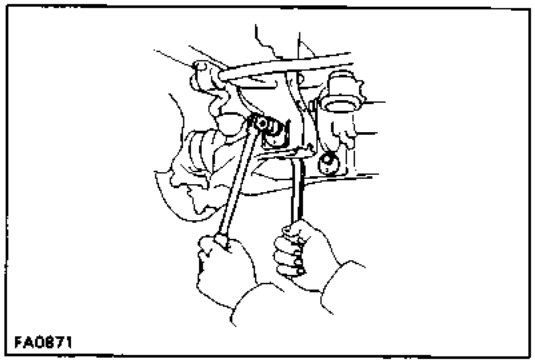

(b) Remove the nuts and adjusting cams, and remove the lower suspension arm.

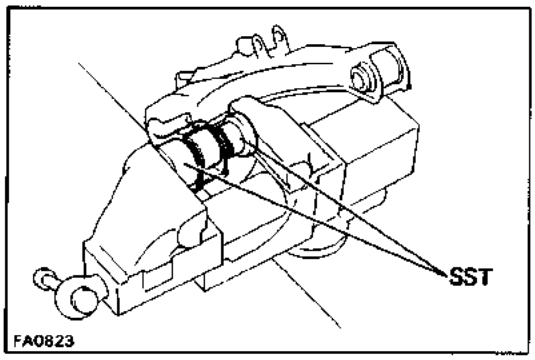

PLACEMENT OF LOWER SUSPENSION ARM BUSHING

1. REMOVE FRONT AND REAR BUSHINGS

Using SST, press out the bushings from the lower suspension arm.

SST 09726–27011 (09726–02050, 09726–02060)

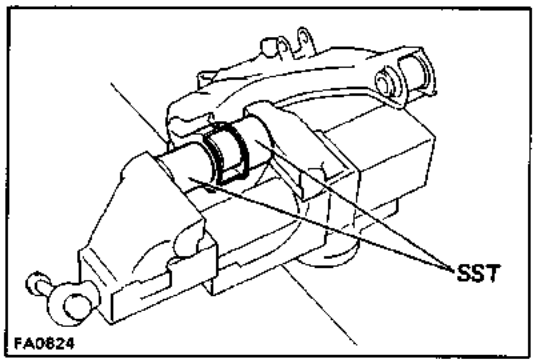

2. INSTALL FRONT AND REAR BUSHINGS

Using SST, press in new bushings to the lower suspension arm.

SST 09726–27011 (09726–02040, 09726–02060)

HINT: Do not apply grease or oil to the bushing.

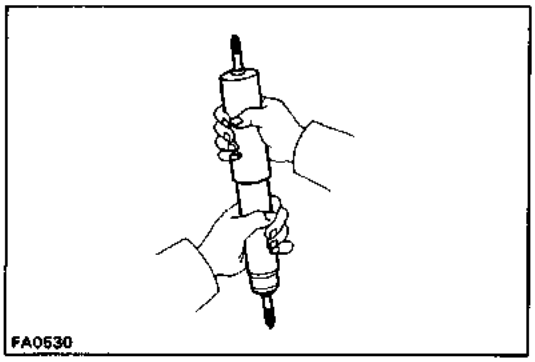

INSPECTION OF SHOCK ABSORBER

INSPECT OPERATION OF SHOCK ABSORBER

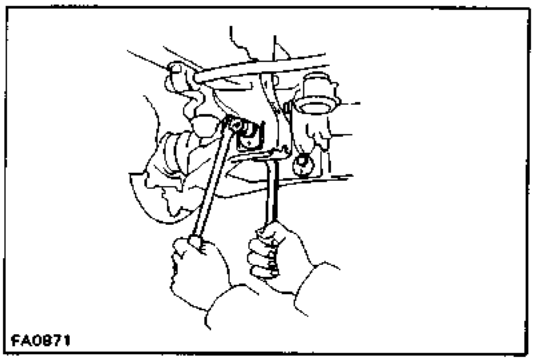

INSTALLATION OF LOWER SUSPENSION ARM AND SHOCK ABSORBER

1. INSTALL LOWER SUSPENSION ARM

(a) Install the lower suspension arm to the frame with adjusting cams.

(b) Temporarily install the two nuts to the front and rear adjusting cams.

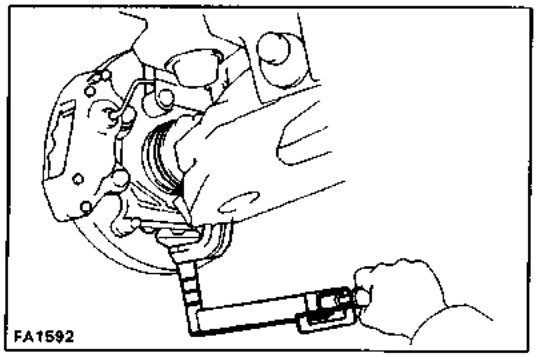

2. CONNECT LOWER SUSPENSION ARM TO LOWER BALL JOINT

(a) Connect the lower suspension arm to the lower ball joint and torque the nut.

Torque: 142 N–m (1,450 kgf –cm, 105 ft–lbf)

(b) Install a new cotter pin.

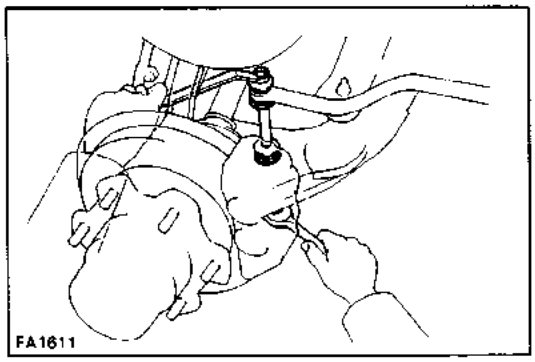

3. CONNECT STABILIZER BAR TO LOWER SUSPENSION ARM

Jack up the stabilizer bar and install the cushions, retainers, collar and bolt, and install and torque the nut.

Torque: 25 N–m (250 kgf–cm, 19 ft–lbf)

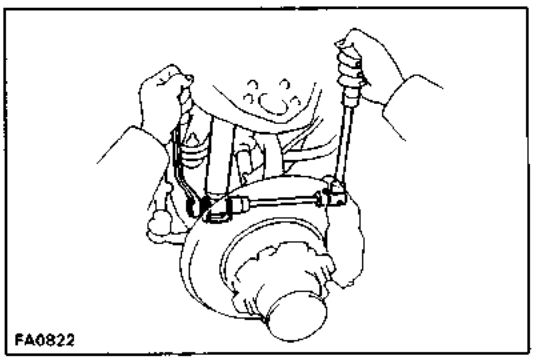

4. INSTALL SHOCK ABSORBER TO LOWER SUSPENSION ARM

Install the shock absorber to lower suspension arm bracket.

Torque: 137 N–m (1,400 kgf–cm, 101 ft–lbf)

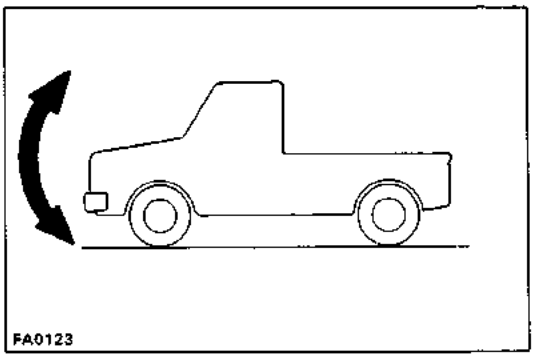

5. TORQUE ADJUSTING CAM NUTS

(a) Install the wheel, and remove the stands and bounce the vehicle up and down to stabilize the suspension.

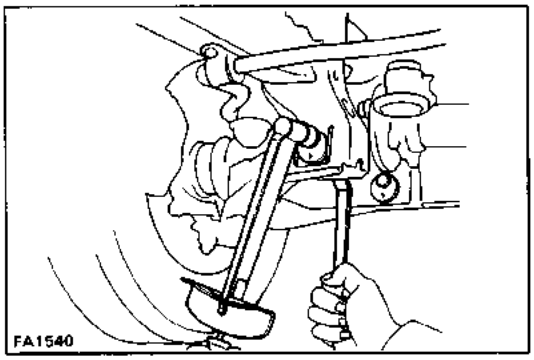

(b) Align the matchmarks and torque the nuts.

Torque: 196 N–m (2,000 kgf–cm, 145 ft–lbf)

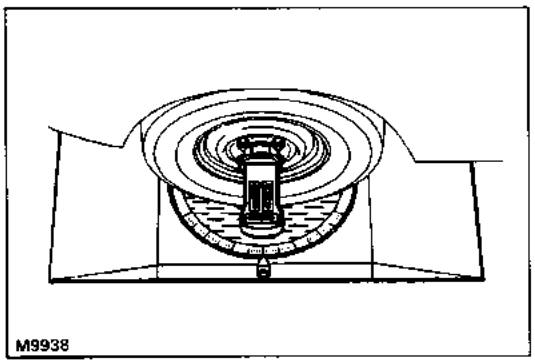

6. CHECK FRONT WHEEL ALIGNMENT

(See page SA–6)

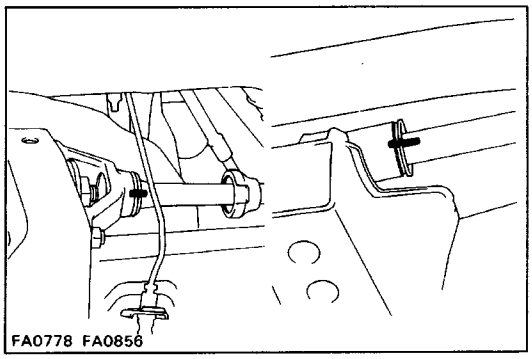

Upper Suspension Arm

(See page SA–111)

REMOVAL OF UPPER SUSPENSION ARM

1. REMOVE TORSION BAR SPRING

(See page SA–114)

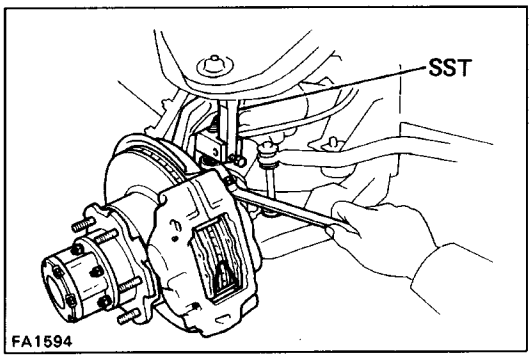

2. DISCONNECT UPPER SUSPENSION ARM FROM UPPER BALL JOINT

Remove the cotter pin and nut, and using SST disconnect the upper ball joint from the steering knuckle.

SST 09628–62011

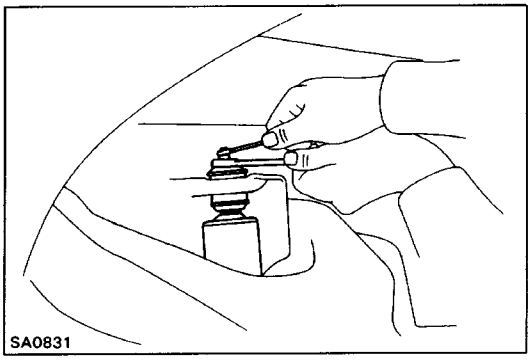

3. DISCONNECT SHOCK ABSORBER FROM FRAME

Remove the nut, cushion and retainer, and disconnect the shock absorber from the frame.

HINT: Do not disconnect the shock absorber from the lower suspension arm.

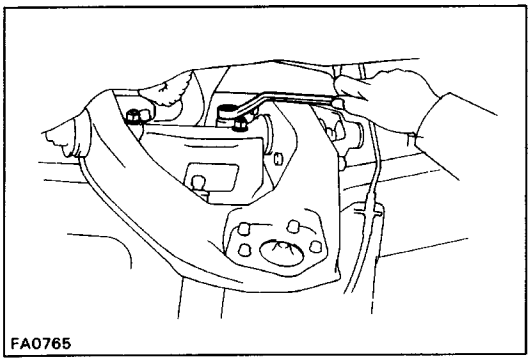

4. REMOVE UPPER SUSPENSION ARM

(a) Disconnect the intermediate shaft from the steering gear housing.

(b) Remove the three bolts, and remove the upper sus–pension arm from the frame.

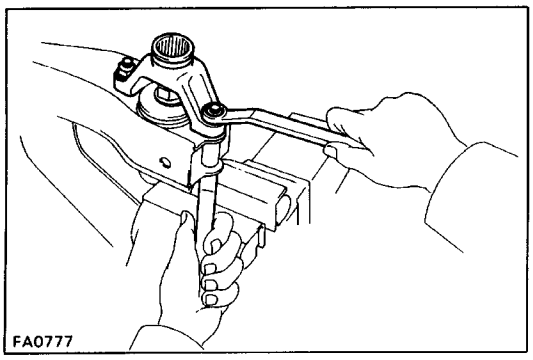

REPLACEMENT OF UPPER ARM BUSHING

1. REMOVE TORQUE ARM

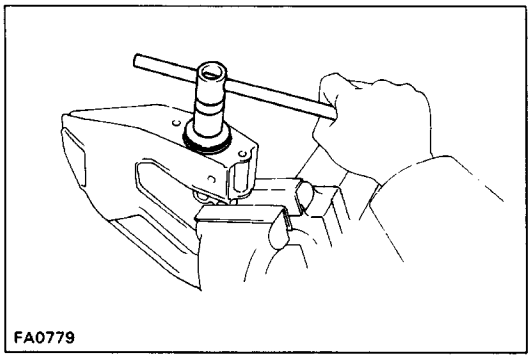

2. REMOVE FRONT BUSHING

(a) Using a chisel and hammer, loosen the staked part of the nut.

(b) Remove the nut.

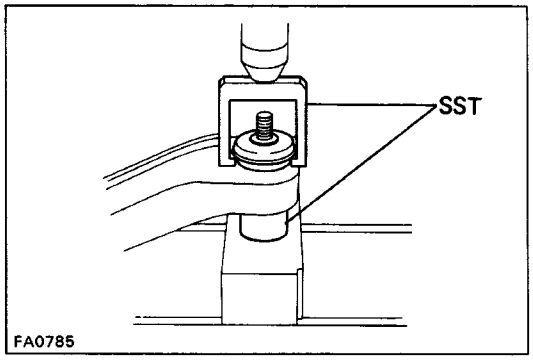

(c) Using SST, push out the front bushing.
SST 09710–26010 (09710–05040, 09710–05050)

3. REMOVE UPPER ARM SHAFT

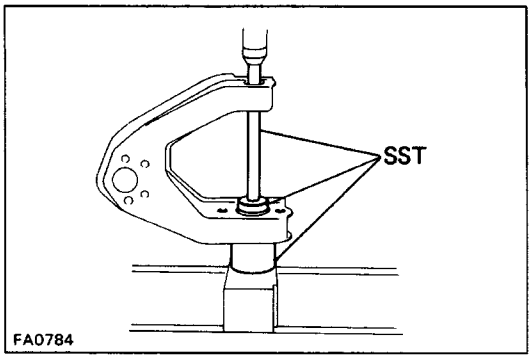

4. REMOVE REAR BUSHING

Using SST, push out the rear bushing.
SST 09710–26010
(09710–05020, 09710–05030, 09710–05080)

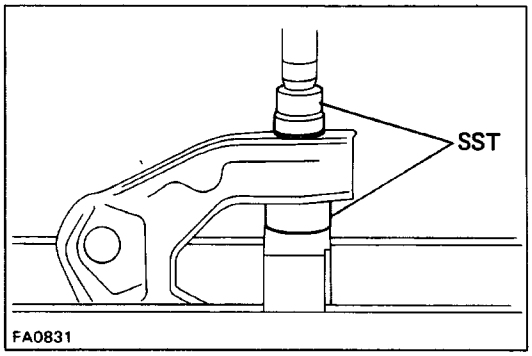

5. INSTALL REAR BUSHING

(a) Using SST, push in a new bushing.
SST 09710–26010 (09710–05060, 09710–05080)
HINT: Do not apply grease or oil to the bushing.

(b) Install the upper arm shaft.

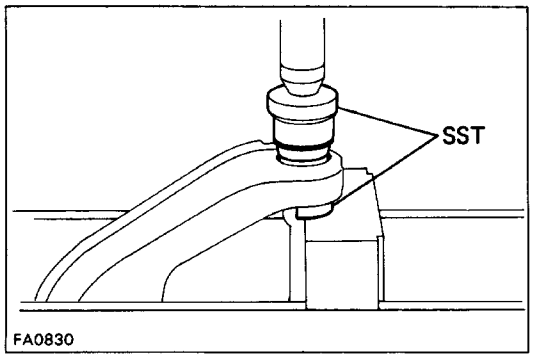

6. INSTALL FRONT BUSHING

Using SST, push in a new front bushing.
SST 09710–26010 (09710–05060, 09710–05080)

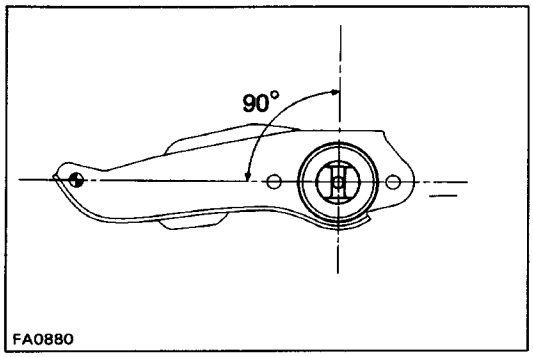

7. TORQUE UPPER ARM SHAFT

(a) Install the retainers and new nuts.

HINT: Position the upper arm shaft so that the frame installation surface is level with the arm.

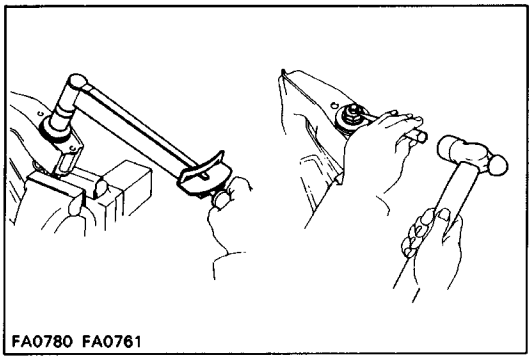

(b) Torque the shaft nuts.

Torque: 226 N–m (2,300 kgf–cm, 166 ft–lbf)

(c) Stake the nuts with a hammer and chisel.

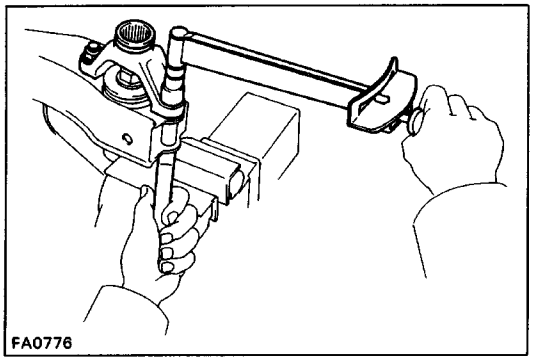

8. INSTALL TORQUE ARM TO UPPER ARM

Torque: 87 N–m (890 kgf–cm, 64 ft–lbf)

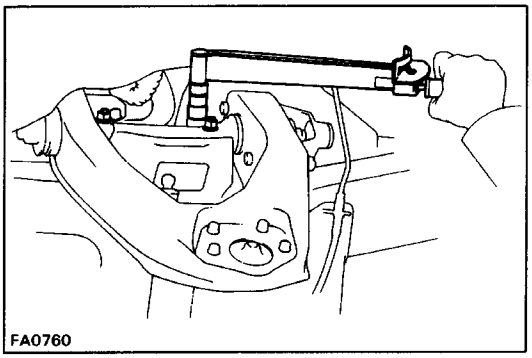

INSTALLATION OF UPPER SUSPENSION ARM

1. INSTALL UPPER SUSPENSION ARM TO FRAME

(a) Install the lower suspension arm to the frame and torque the mounting bolts.

Torque: 178 N–m (1,810 kgf–cm, 131 ft–lbf)

(b) Connect the intermediate shaft to the steering gear housing.

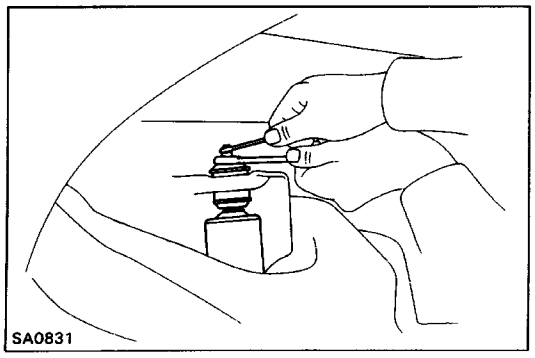

2. CONNECT SHOCK ABSORBER TO FRAME

Connect the shock absorber to frame with cushion and retainer and install and torque a new nut as shown in the figure.

Torque: 25 N–m (250 kgf–cm, 18 ft–lbf)

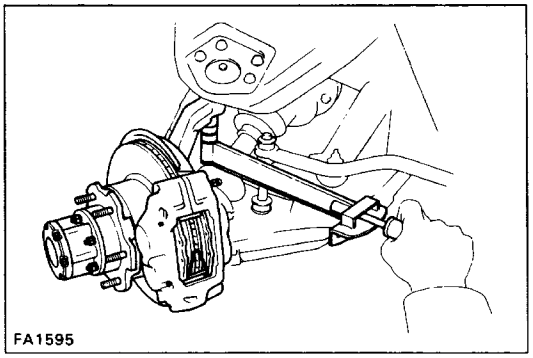

3. CONNECT UPPER SUSPENSION ARM TO UPPER BALL JOINT

(a) Connect the upper ball joint to the steering knuckle and install and torque the nut.
Torque: 142 N–m (1,450 kgf–cm, 105 ft–lbf)

(b) Install a new cotter pin.

4. INSTALL TORSION BAR SPRING
(See page SA–114)

5. CHECK FRONT WHEEL ALIGNMENT
(See page SA–6)

Stabilizer Bar

(See page SA–111)

REMOVAL OF STABILIZER BAR

REMOVE STABILIZER BAR

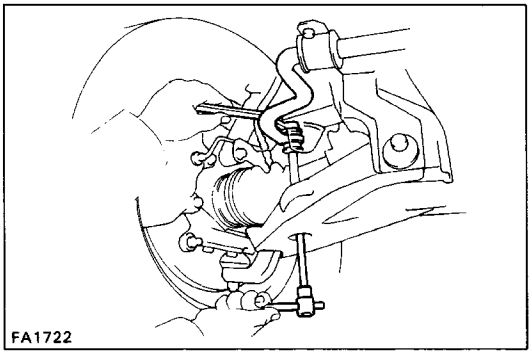

(a) Remove the nut, cushions and retainers holding both sides of the stabilizer bar from the lower suspension arms, and disconnect the stabilizer bar.

(b) Remove both stabilizer bar brackets and cushions, and remove the stabilizer bar.

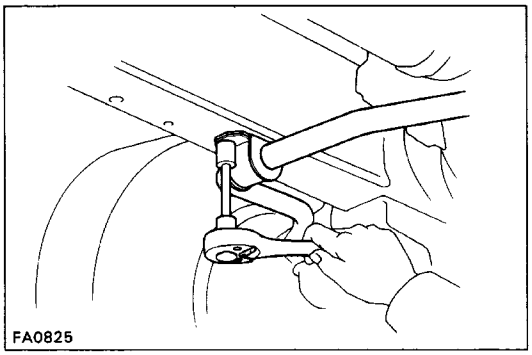

INSTALLATION OF STABILIZER BAR

1. PLACE STABILIZER BAR TO FRAME

Place the stabilizer bar in position and install the both stabilizer bar cushion and brackets to the frame. Temporarily install the bolts.

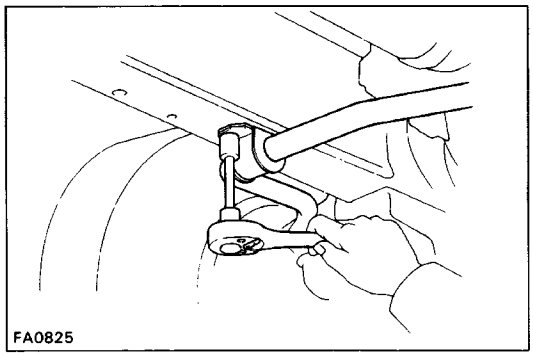

2. CONNECT STABILIZER BAR TO LOWER SUSPENSION ARMS

Connect the stabilizer bar on both sides to the lower arms with bolts, cushion, retainers and a new nut as shown. Torque the nut.
Torque: 25 N–m (260 kgf–cm, 19 ft–lbf)

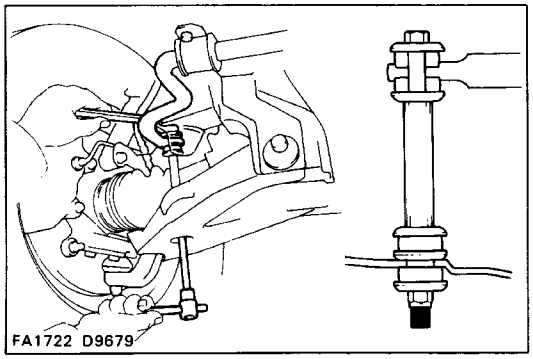

3. TORQUE BRACKET SET BOLTS TO FRAME
Torque: 29 N–m (300 kgf–cm, 22 ft–lbf)

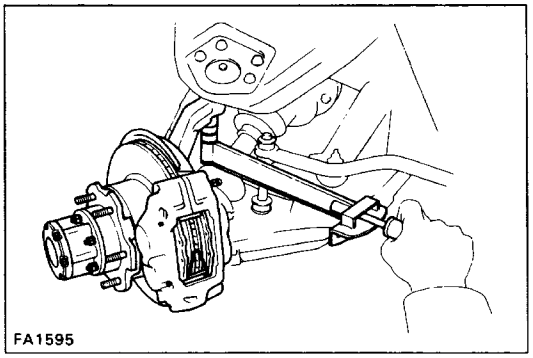

3. CONNECT UPPER SUSPENSION ARM TO UPPER BALL JOINT

(a) Connect the upper ball joint to the steering knuckle and install and torque the nut.
Torque: 142 N–m (1,450 kgf–cm, 105 ft–lbf)

(b) Install a new cotter pin.

4. INSTALL TORSION BAR SPRING
(See page SA–114)

5. CHECK FRONT WHEEL ALIGNMENT
(See page SA–6)

Stabilizer Bar

(See page SA–111)

REMOVAL OF STABILIZER BAR

REMOVE STABILIZER BAR

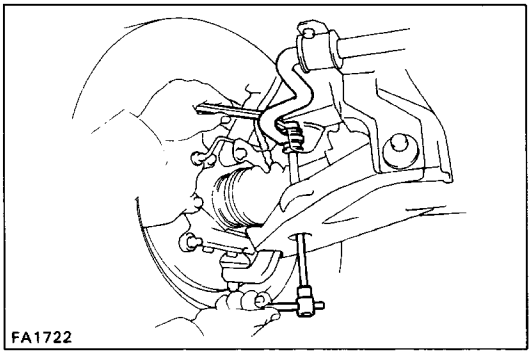

(a) Remove the nut, cushions and retainers holding both sides of the stabilizer bar from the lower suspension arms, and disconnect the stabilizer bar.

(b) Remove both stabilizer bar brackets and cushions, and remove the stabilizer bar.

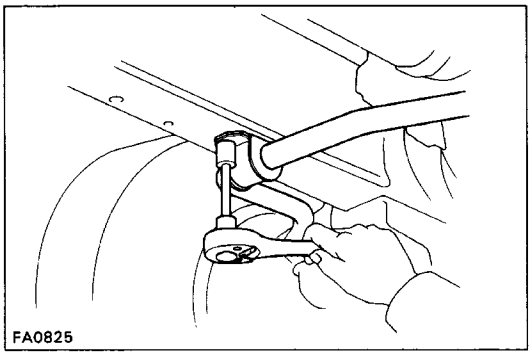

INSTALLATION OF STABILIZER BAR

1. PLACE STABILIZER BAR TO FRAME

Place the stabilizer bar in position and install the both stabilizer bar cushion and brackets to the frame. Temporarily install the bolts.

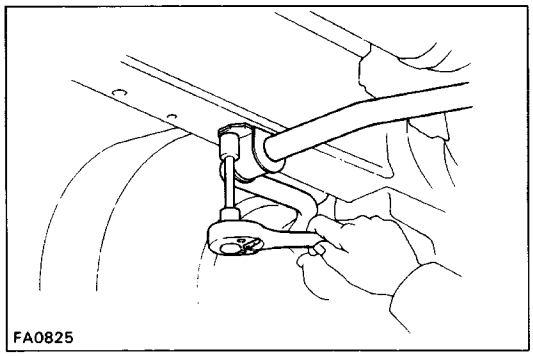

2. CONNECT STABILIZER BAR TO LOWER SUSPENSION ARMS

Connect the stabilizer bar on both sides to the lower arms with bolts, cushion, retainers and a new nut as shown. Torque the nut.
Torque: 25 N–m (260 kgf–cm, 19 ft–lbf)

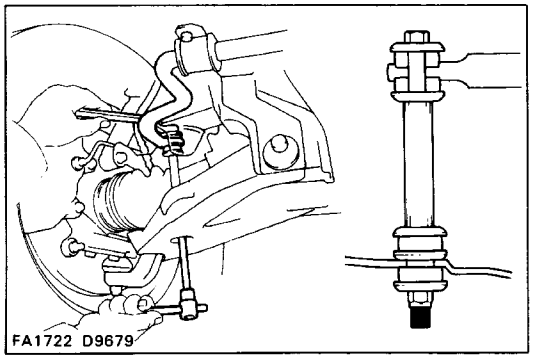

3. TORQUE BRACKET SET BOLTS TO FRAME
Torque: 29 N–m (300 kgf–cm, 22 ft–lbf)

REAR AXLE SHAFT (Single Tire)

COMPONENTS

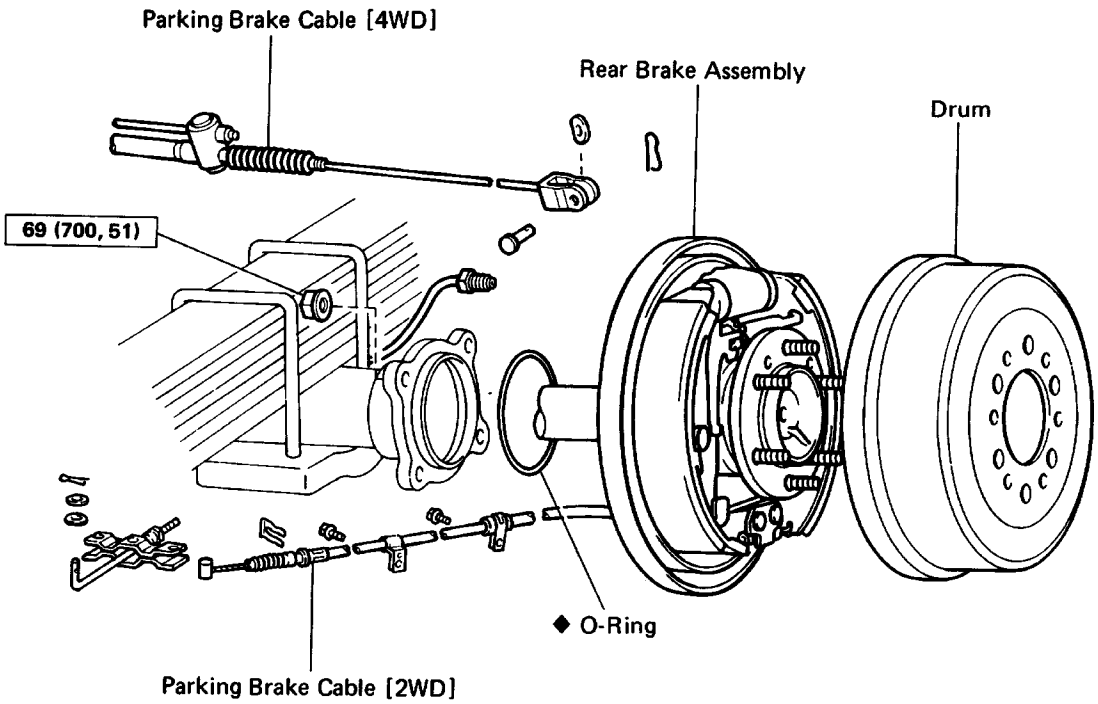

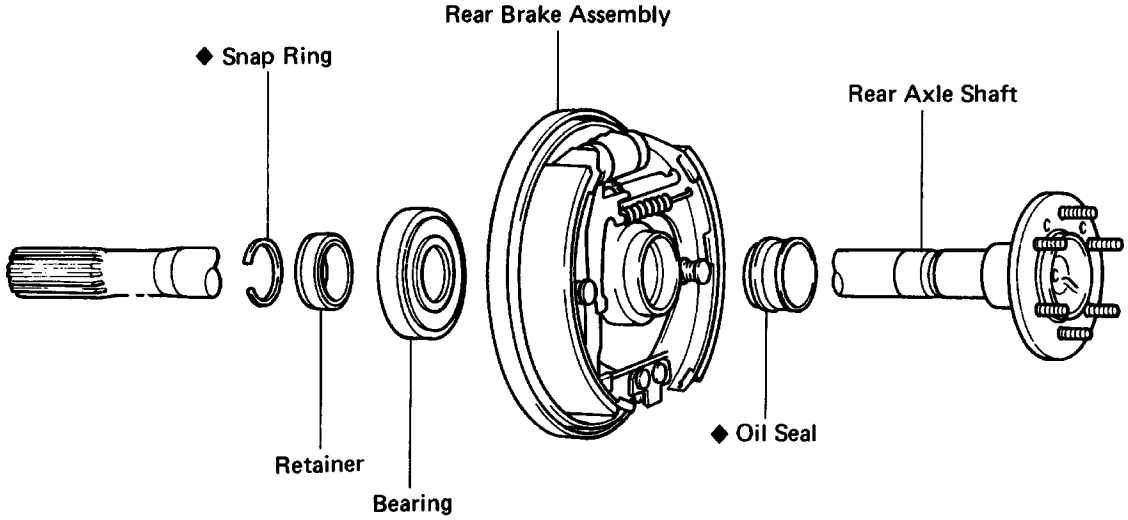

N·m (kgf·cm, ft·lbf) : Specified torque

◆ Non-reusable part

SA0387
SA0388

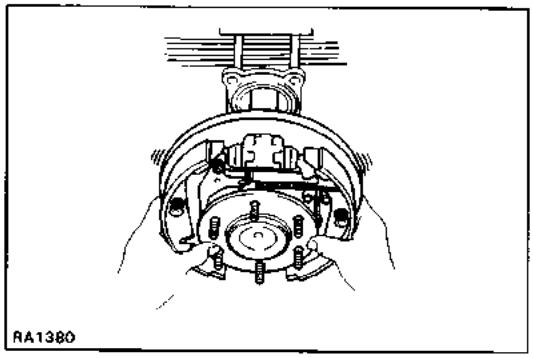

REMOVAL OF REAR AXLE SHAFT

1. REMOVE WHEEL AND BRAKE DRUM

2. DISCONNECT BRAKE TUBE AND PARKING BRAKE CABLE

3. REMOVE FOUR BACKING PLATE MOUNTING NUTS

4. REMOVE REAR AXLE SHAFT FROM REAR AXLE HOUSING

5. REMOVE SNAP RING

6. REMOVE REAR AXLE SHAFT FROM BACKING PLATE

(a) Attach SST to the backing plate.
SST 09521–25011

(b) Press out the rear axle shaft from the backing plate.
NOTICE: When pulling out the rear axle, be careful not to damage the oil seal.

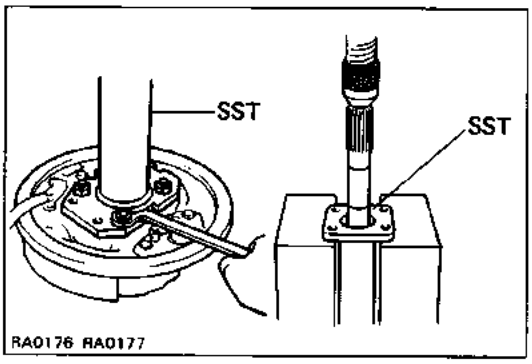

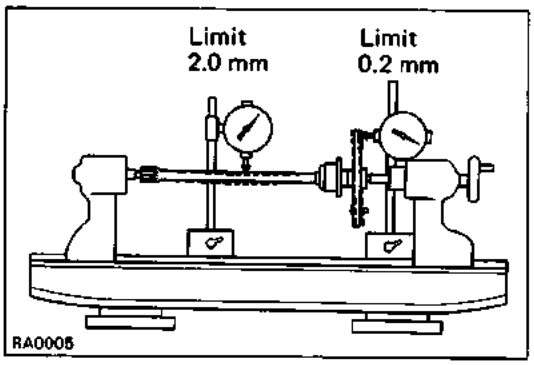

INSPECTION AND REPAIR OF REAR AXLE SHAFT COMPONENTS

1. INSPECT REAR AXLE SHAFT AND FLANGE FOR WEAR, DAMAGE OR RUNOUT

Maximum shaft runout: 2.0 mm (0.079 in.)

Maximum flange runout: 0.2 mm (0.008 in.)

If the rear axle shaft or flange is damaged or worn, or if runout is greater than maximum, replace the rear axle shaft.

2. INSPECT OUTER OIL SEAL

(a) Check for damage.

(b) Check the oil seal lip for wear or damage.
If necessary, replace the oil seal.

3. REMOVE OUTER OIL SEAL

Using SST, remove the oil seal.
SST 09308–00010

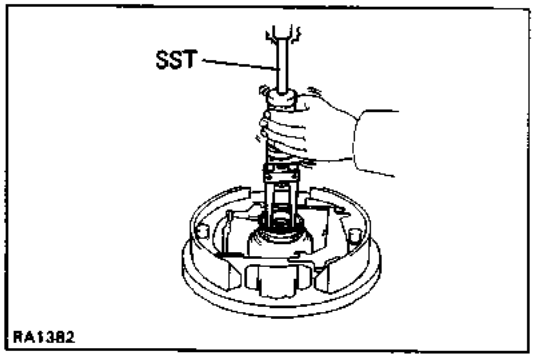

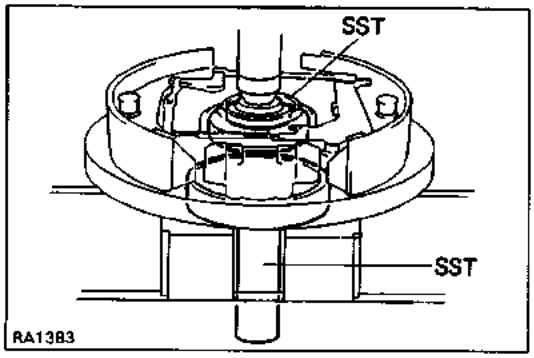

4. INSPECT REAR AXLE BEARING

Check for wear or damage.

5. IF NECESSARY, REPLACE REAR AXLE BEARING

(a) Using SST, press out the bearing.
SST 09223–56010 and 09608–35014 (09608–06100)

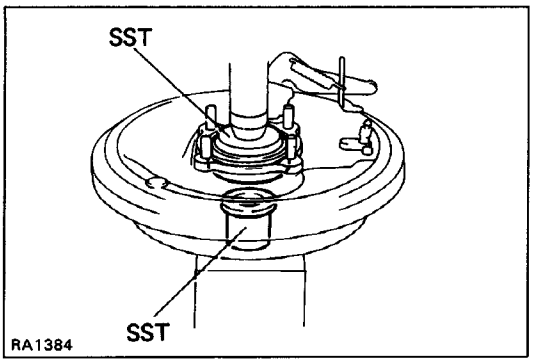

(b) Using SST, press in a new bearing.
SST 09515–30010 and 09608–35014 (09608–06180)

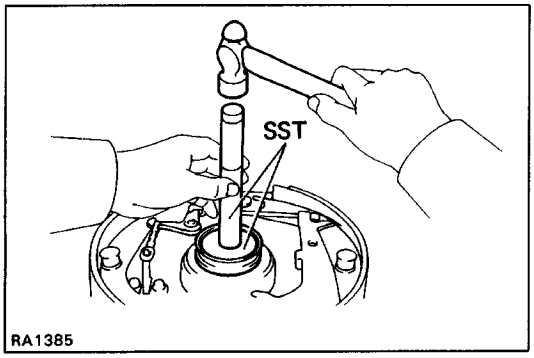

6. INSTALL NEW OUTER OIL SEAL

Using SST, tap in a new oil seal.
SST 09608–30012 (09608–04020, 09608–04070)

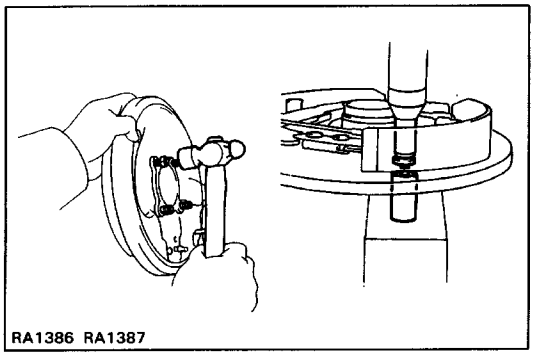

7. INSPECT BEARING CASE

Check for wear or damage.

8. IF NECESSARY, REPLACE BEARING CASE

(a) Remove the oil seal and bearing.
(b) Install nuts to the serration bolts.
(c) Using a hammer, tap out the serration bolts and re–move the bearing case.
(d) Position the backing plate on the new bearing case and, using two socket wrenches, press in the serra–tion bolts.
(e) Install a new bearing and oil seal.

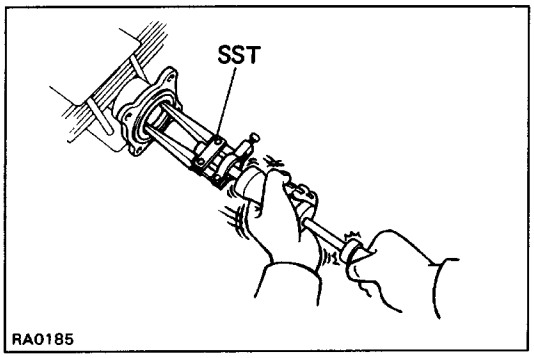

9. INSPECT OIL SEAL FOR WEAR OR DAMAGE

10. IF NECESSARY, REPLACE OIL SEAL

(a) Using SST, remove the oil seal.
SST 09308–00010

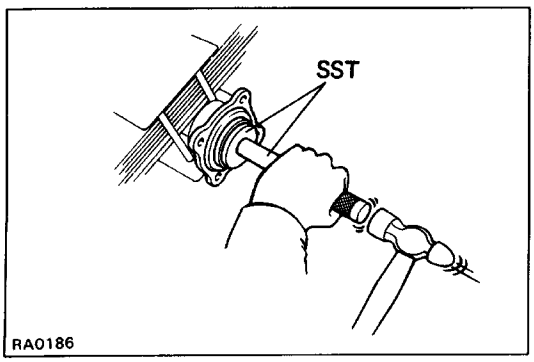

(b) Apply MP grease to the oil seal.
(c) Using SST, drive in a new oil seal.
SST 09608–30012 (09608–04020, 09608–04100)

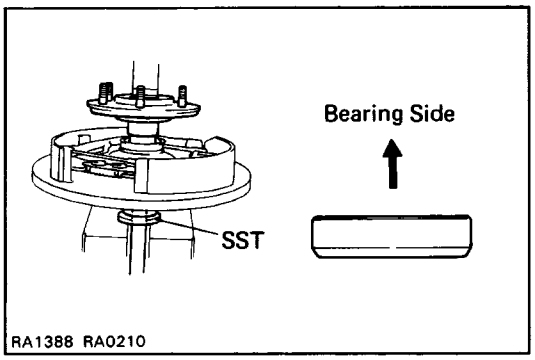

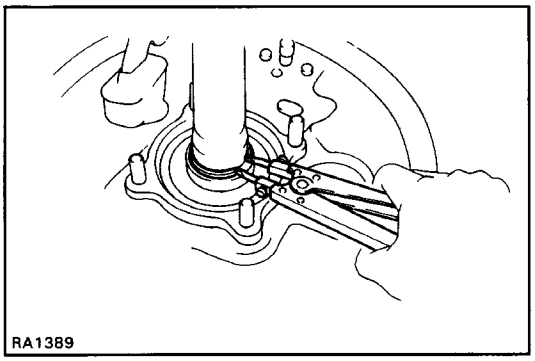

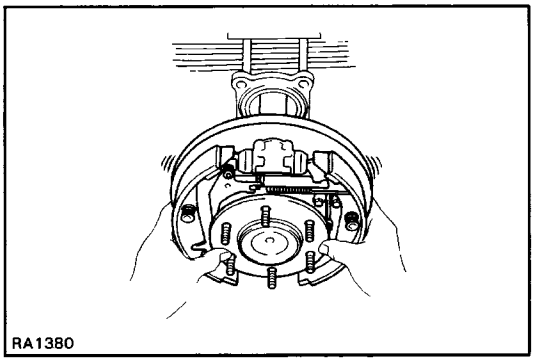

INSTALLATION OF REAR AXLE SHAFT

(See page SA–123)

1. INSTALL REAR AXLE SHAFT IN BACKING PLATE

(a) Apply MP grease to the oil seal lip.

(b) Install the backing plate and bearing retainer on the rear axle shaft.

(c) Using SST, press the rear axle shaft into the backing plate.
SST 09515–30010

(d) Using snap ring pliers, install a new snap ring.

2. INSTALL REAR AXLE SHAFT INTO HOUSING

Install the rear axle with four nuts.
Torque: 59 N–m (700 kgf–cm, 51 ft–lbf)
HINT:

- Be careful not to damage the oil seal.
- When inserting the axle shaft, be careful not to hit or deform the oil deflector inside the axle housing.

3. CONNECT BRAKE TUBE AND PARKING BRAKE CABLE

4. INSTALL BRAKE DRUM AND WHEEL

5. BLEED BRAKE SYSTEM

REAR AXLE SHAFT AND AXLE HUB (Double Tire)

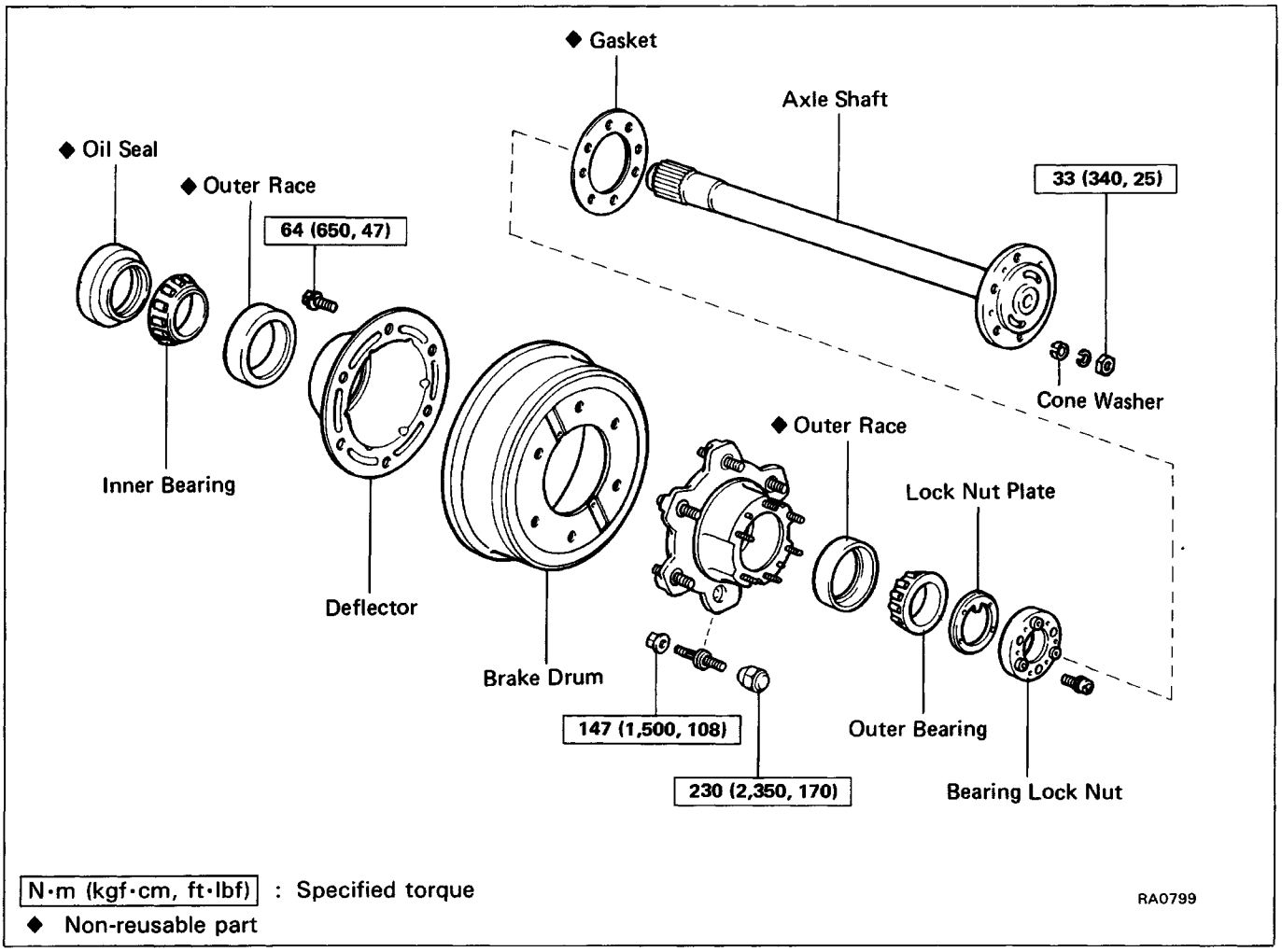

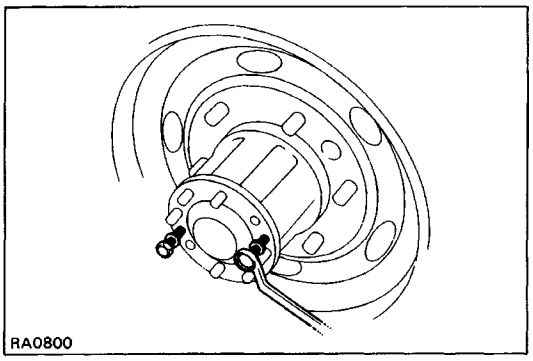

REMOVAL OF REAR AXLE SHAFT

1. REMOVE CONE WASHERS

(a) Remove the six nuts and washers.
(b) Install two service bolts and one turn.
(c) Tap on the shaft and remove the six cone washers.

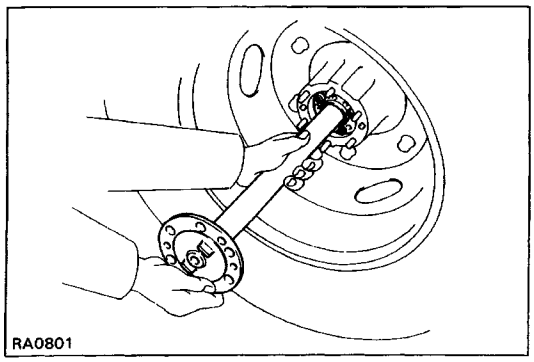

2. REMOVE REAR AXLE SHAFT

(a) Tighten the two service bolts and separate the axle shaft.
(b) Remove the axle shaft with the gasket.
(c) Remove the two service bolts.
HINT: Be careful not to damage the oil seal with the splines.

INSPECTION OF REAR AXLE SHAFT COMPONENTS

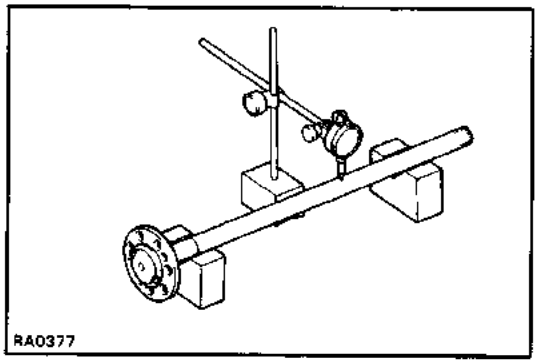

1. INSPECT REAR AXLE SHAFT

Check for wear, damage or runout.

Maximum runout: 2.0 mm (0.079 in.)

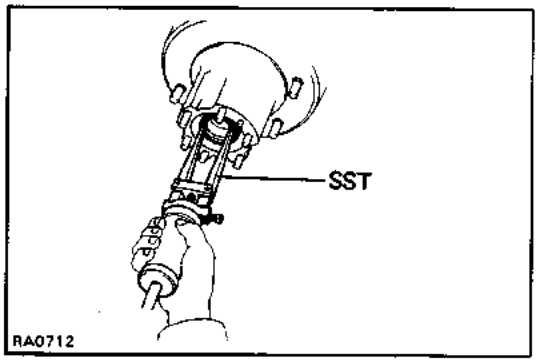

2. INSPECT OIL SEAL FOR WEAR OR DAMAGE

If the oil seal is damaged or worn, replace it.

3. REPLACE OIL SEAL

(a) Using SST, remove the oil seal.

SST 09308–00010

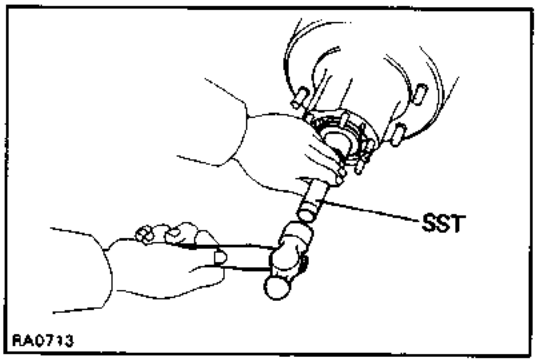

(b) Using SST, drive in the oil seal.

SST 09517–12010

(c) Apply MP grease to the oil seal lip.

INSTALLATION OF REAR AXLE SHAFT

(See page SA–127)

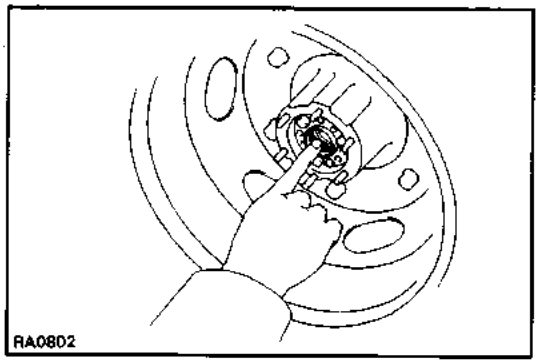

1. APPLY MP GREASE TO OIL SEAL LIP

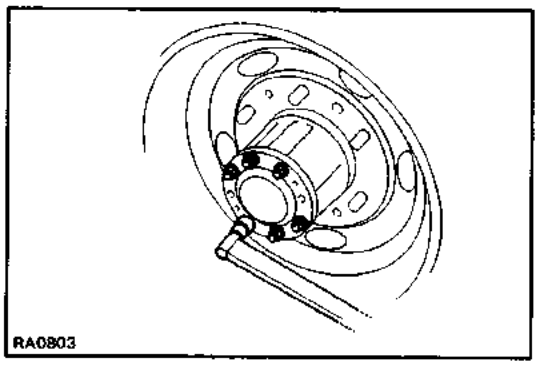

2. INSTALL REAR AXLE SHAFT

Install the rear axle shaft, six cone washers and spring washers with nuts.

Torque: 33 N–m (340 kgf–cm, 25 ft–lbf)

HINT: Be careful not to damage the oil seal with the splines.

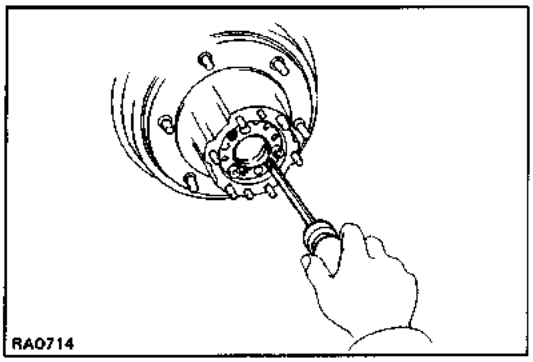

DISASSEMBLY OF REAR AXLE HUB

1. REMOVE REAR WHEEL AND REAR AXLE SHAFT

(See page SA–127)

2. REMOVE BEARING LOCK NUT

(a) Remove the two bolts from the bearing lock nut.

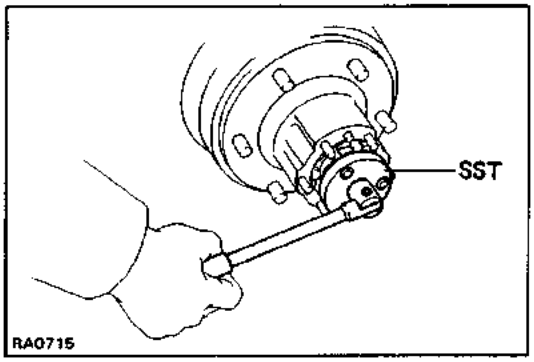

(b) Using SST, remove the bearing lock nut.
SST 09509–25011

(c) Remove the bearing lock plate.

3. REMOVE AXLE HUB FROM AXLE

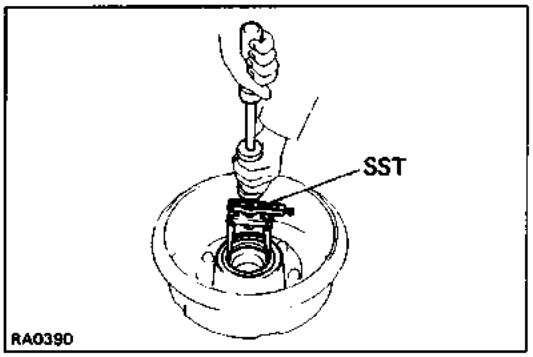

4. REMOVE OIL SEAL AND INNER BEARING

(a) Using SST, remove the oil seal from the axle hub.
SST 09308–00010

(b) Remove the inner bearing from the axle hub.

INSPECTION AND REPAIR OF REAR AXLE HUB

1. INSPECT AXLE HOUSING

Using a magnetic flaw detector or flaw detecting pene–trant, check for damage or cracks.

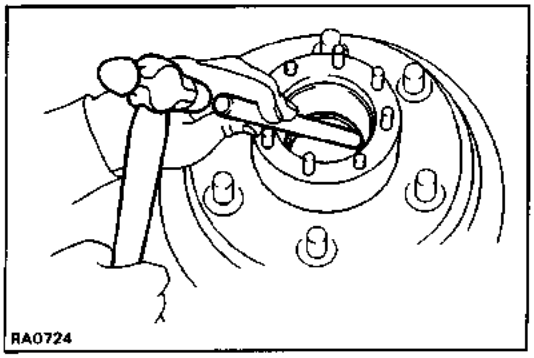

2. REPLACE BEARING OUTER RACE

(a) Using a hammer and brass bar, drive out the outer race.

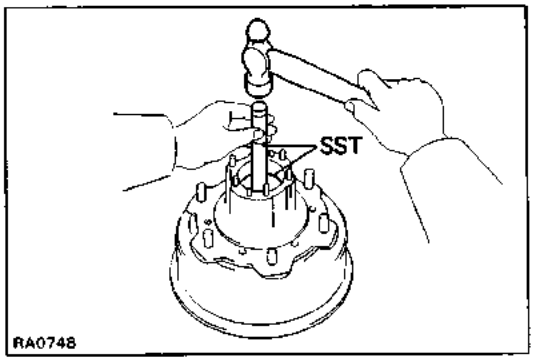

(b) Using SST, carefully tap in a new bearing outer race.

SST Inner side 09608–35014
(09608–06020, 09608–06210)

Outer side 09608–35014
(09608–06020, 09608–06200)

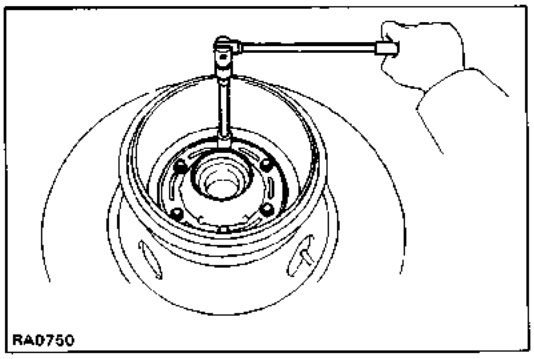

3. REPLACE HUB BOLT

(a) Remove the six bolts and deflector.

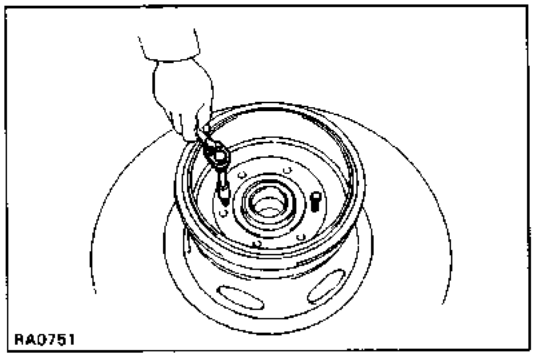

(b) Using the two service bolts, separate the hub and brake drum.

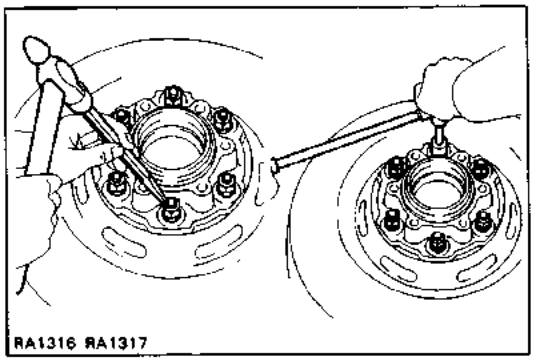

(c) Unstake the bolt and remove the nut.

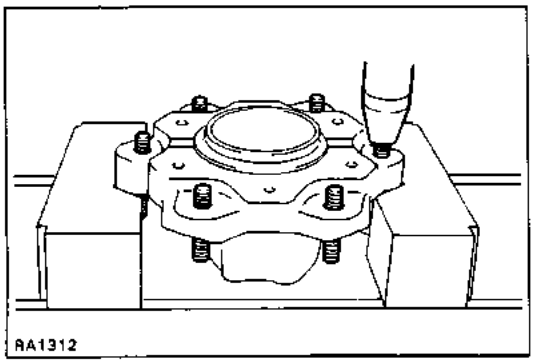

(d) Using a press, press out the hub bolt.

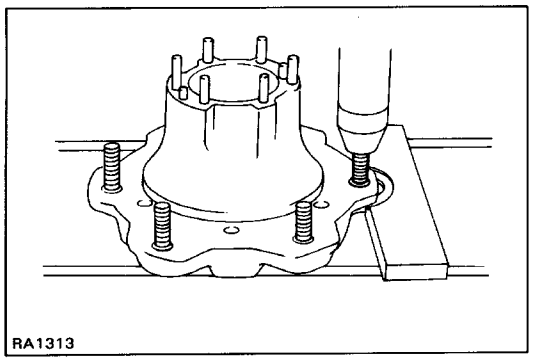

(e) Using a press, press in a new hub bolt.

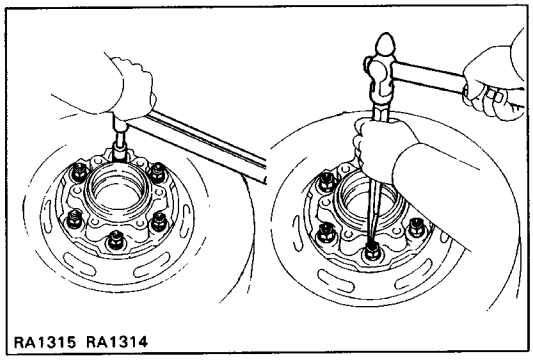

(f) Install and tighten the nut and stake the bolt.
Torque: 147 N–m (1,500 kgf–cm, 108 ft–lbf)

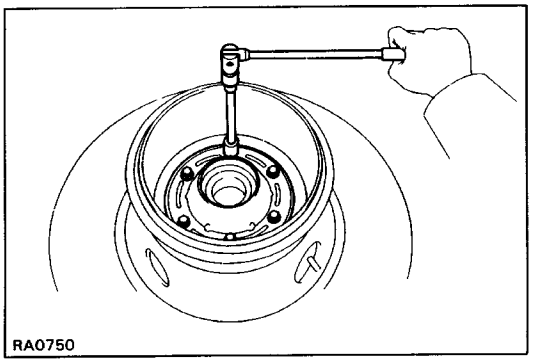

(g) Install the deflector and torque the six bolts.
Torque: 64 N–m (650 kgf–cm, 47 ft–lbf)

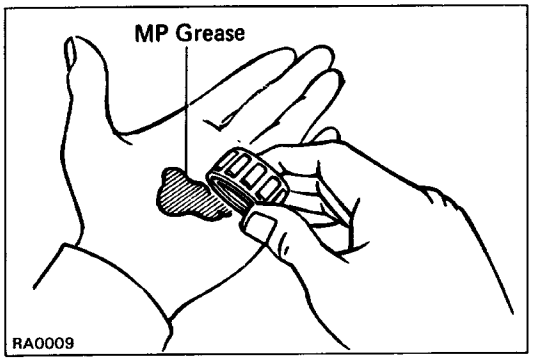

ASSEMBLY OF REAR AXLE HUB
(See page SA–127)
1. PACK BEARING WITH MP GREASE
(a) Place MP grease in the palm of your hand.
(b) Pack grease into the bearing, and continuing until the grease oozes out from the other side.
(c) Do the same around the bearing circumference.

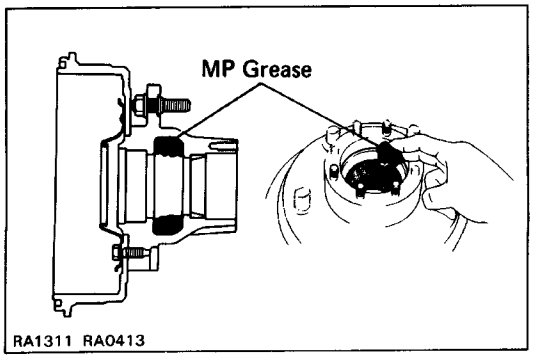

2. COAT SIDE HUB WITH MP GREASE

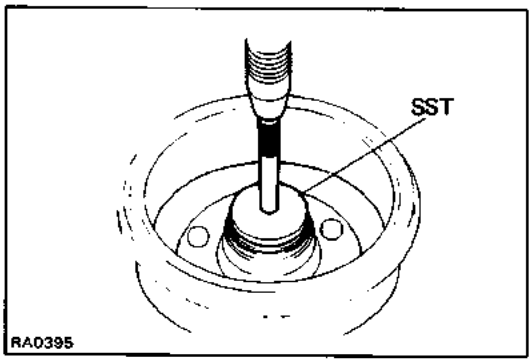

3. INSTALL INNER BEARING AND OIL SEAL

(a) Place inner bearing into the hub.

(b) Using SST, press in a new oil seal to the hub.

SST 09608–35014 (09608–06020 and 09608–06180)

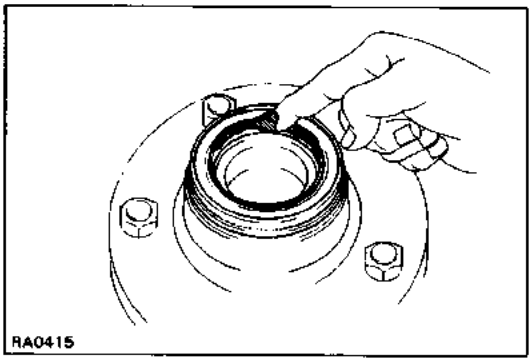

(c) Apply MP grease to the oil seal lip.

4. INSTALL AXLE HUB ON AXLE HOUSING

(a) Place the axle hub on the axle housing.

(b) Install the outer bearing into the axle hub.

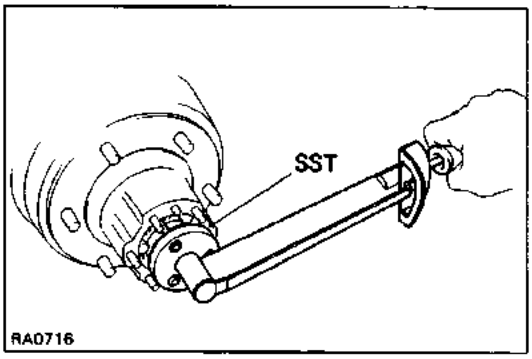

5. ADJUST PRELOAD

(a) Install the lock plate.

(b) Using SST, torque the bearing lock nut.

SST 09509–25011

Torque: 59 N–m (600 kgf–cm, 43 ft–lbf)

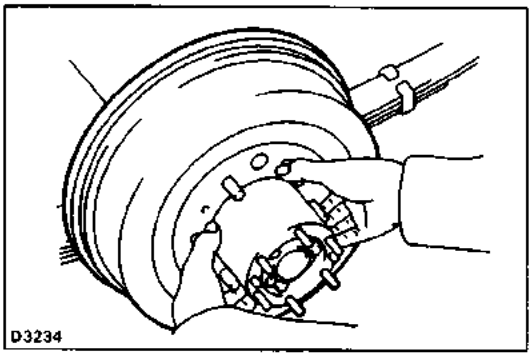

(c) Snug down the bearing by turning the hub several times.

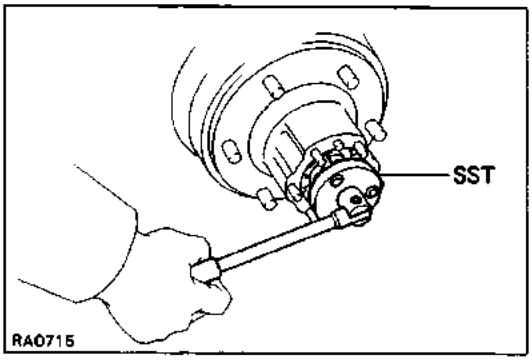

(d) Using SST, retighten the bearing lock nut.

SST 09509–25011

Torque: 59 N–m (600 kgf–cm, 43 ft–lbf)

(e) Using SST, loosen the bearing lock nut until you can rotate it by hand.

SST 09509–25011

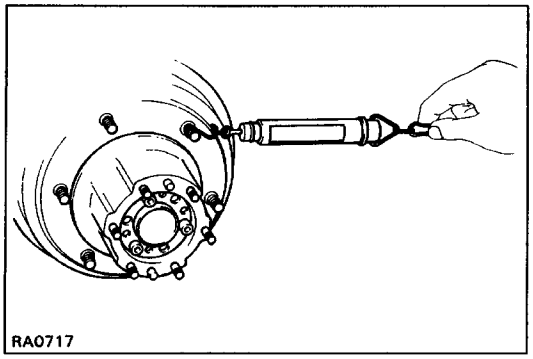

(f) Using a spring tension gauge, measure and note friction force of the oil seal. (starting)

(g) Using SST, tighten the bearing lock nut until the preload is within the specification below.
SST 09 509–2 5011
Preload (starting):
Add oil seal frictional force
1.0 –14.7 N (0.1 –1.5 kgf, 0.2 –3.3 lbf)

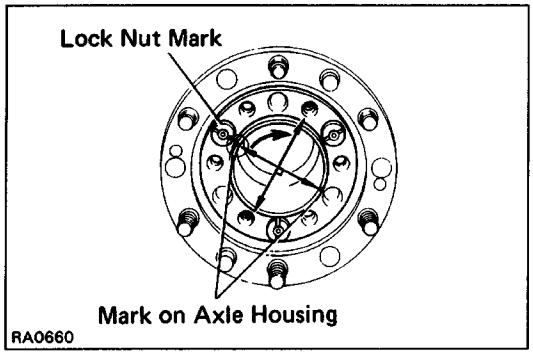

(h) Align the lock nut mark with one of the marks on the axle housing, and place lock bolts in the holes at right angles to the lock nut.

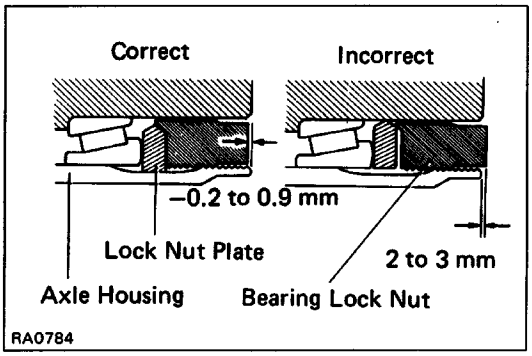

(i) Measure the distance between the top surface of axle housing and the lock nut.
Standard distance: – 0.2 to 0.9 mm
(– 0.008 to 0.035 in.)
If not within specification, reinstall the axle hub.

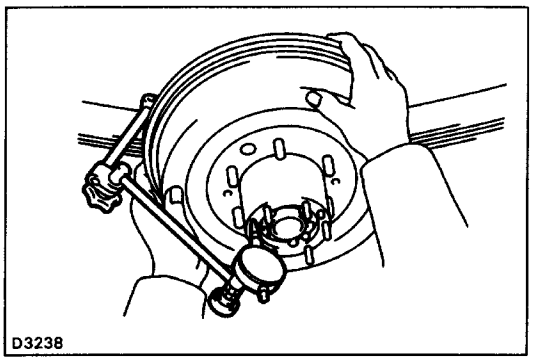

(j) Check the movement of the drum.

(k) Check that has no axle play.

6. INSTALL REAR AXLE SHAFT
(See page SA–128)

7. INSTALL WHEEL AND LOWER VEHICLE

DIFFERENTIAL

COMPONENTS

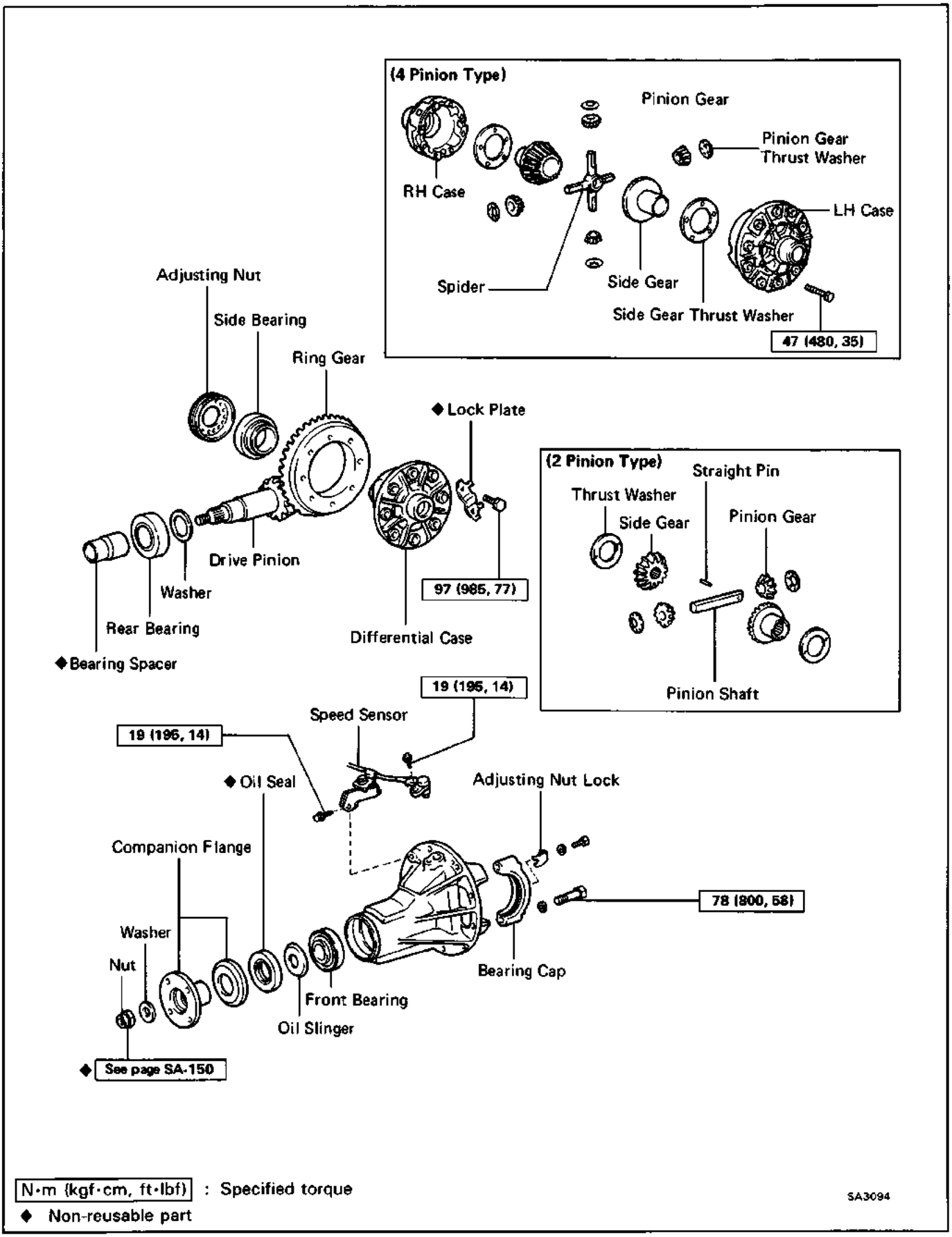

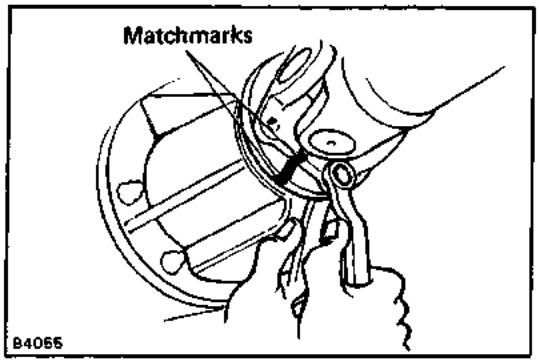

ON–VEHICLE REPLACEMENT OF OIL SEAL

1. DISCONNECT PROPELLER SHAFT FROM DIFFERENTIAL

(a) Place matchmarks on the flanges.

(b) Remove the four bolts and nuts.

2. REMOVE COMPANION FLANGE

(See step 7 on page SA–138)

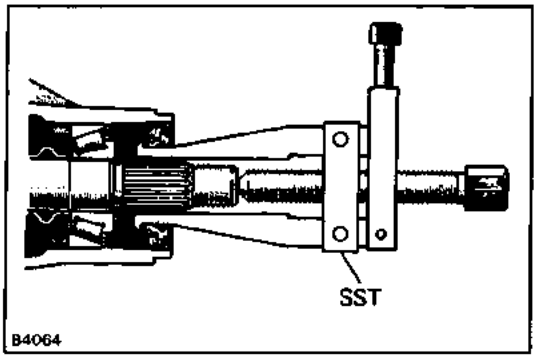

3. REMOVE OIL SEAL AND OIL SLINGER

(a) Using SST, remove the oil sea! from the housing.

SST 09308–10010

(b) Remove the oil slinger.

4. REMOVE FRONT BEARING AND BEARING SPACER

(See step 9 on page SA–138)

5. INSTALL NEW BEARING SPACER AND FRONT BEARING

(See step 12 on page SA–149)

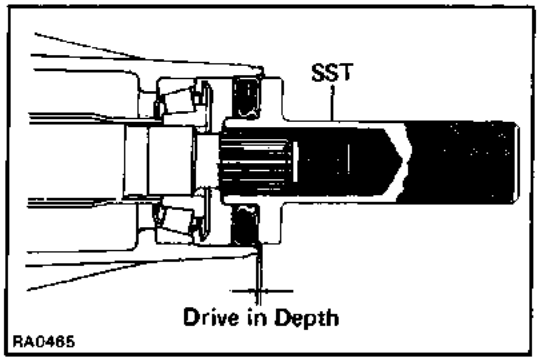

6. INSTALL OIL SLINGER AND NEW OIL SEAL

(a) Install the oil slinger facing as shown.

(b) Using SST, drive in a new oil seal as shown.

SST 09554–30011

Oil seal drive in depth:

7.5 in. 1.5 mm (0.059 in.)

8 in. 1.0 mm (0.039 in.)

(c) Apply MP grease to the oil seal lip.

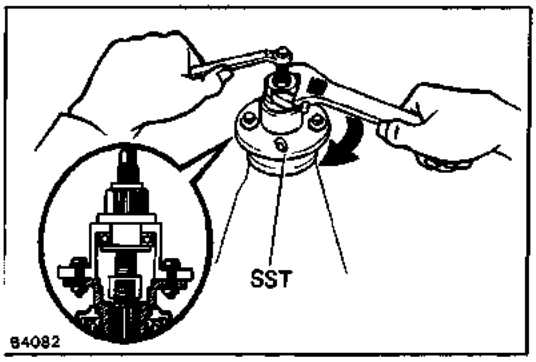

7. INSTALL COMPANION FLANGE

(See step 14 on page SA–149)

8. ADJUST DRIVE PINION BEARING PRELOAD

(See step 15 on page SA–150)

9. STAKE DRIVE PINION NUT

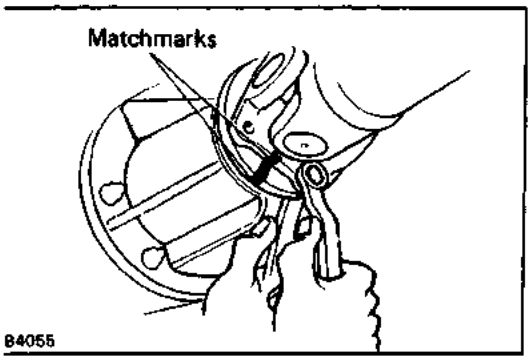

10. CONNECT PROPELLER SHAFT FLANGE TO COMPANION FLANGE

(a) Align the matchmarks on the flanges and connect the flanges with four bolts and nuts.

(b) Torque the four bolts and nuts.

Torque: 4WD 3VZ–E [MT]

76 N–m (780 kgf–cm, 56 ft–lbf)

Ex. 4WD 3VZ–E [MT]

74 N–m (750 kgf–cm, 54 ft–lbf)

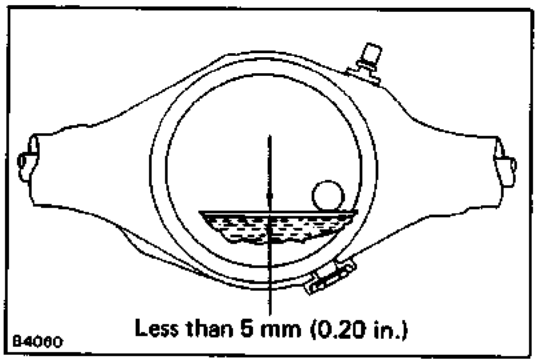

11. CHECK DIFFERENTIAL OIL LEVEL

Fill with hypoid gear oil if necessary.

Oil type: API GL–5 hypoid gear oil

Viscosity: Above – 180C (0°F) SAE 90

Below – 180C (0°F)

SAE 80V1r or 80w–90

Capacity:

liters (US qts, Imp. qts)

2W D	7.5 in.	2 pinion	1.35 (1.43, 1.19)
	8 in.	2 pinion	1.8 (1.9, 1.6)
		4 pinion	2.2 (2.3, 1.9)
4WD	8 in.	2 pinion	2.2 (2.3, 1.9)
		4 pinion	2.2 (2.3, 1.9)

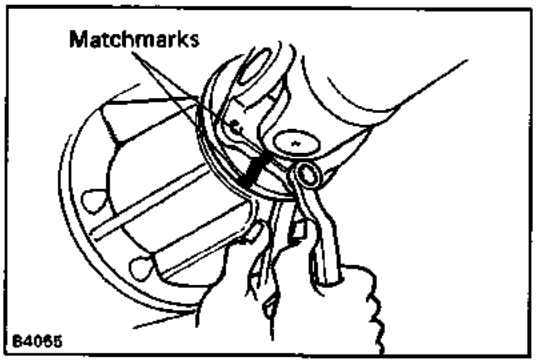

REMOVAL OF DIFFERENTIAL

1. REMOVE DRAIN PLUG AND DRAIN DIFFERENTIAL OIL

2. REMOVE REAR AXLE SHAFTS

(See page SA–124 or SA–127)

3. DISCONNECT PROPELLER SHAFT FROM DIFFERENTIAL

(See page SA–135)

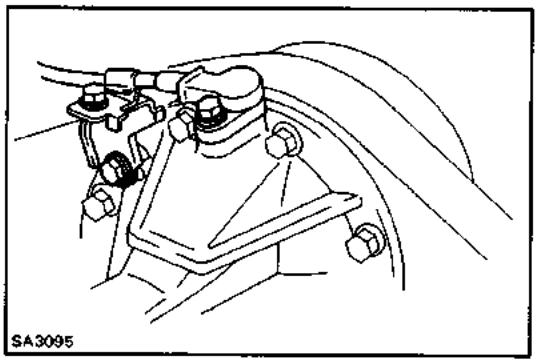

4. (wl REAR–WHEEL ANTI–LOCK BRAKE SYSTEM)

DISCONNECT SPEED SENSOR

Remove the two bolts and the speed sensor.

5. REMOVE DIFFERENTIAL CARRIER ASSEMBLY

DISASSEMBLY OF DIFFERENTIAL

(See page SA–134)

HINT: If the differential is noisy, perform the following preinspection before disassembly to determine the cause.

If the differential has severe problems, disassemble and repair it as necessary.

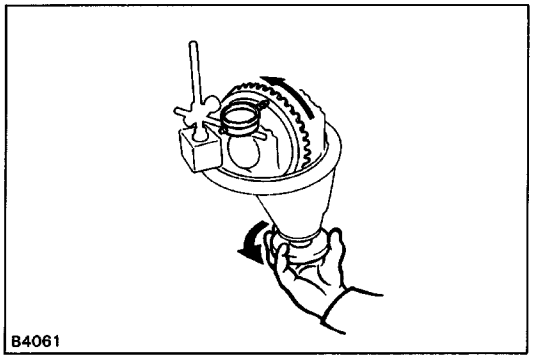

1. CHECK RING GEAR RUNOUT

If the runout is greater than maximum, install a new ring gear.

Maximum runout:

7.5 in. 0.07 mm (0.0028 in.)

8 in. 0.10 mm (0.0039 in.)

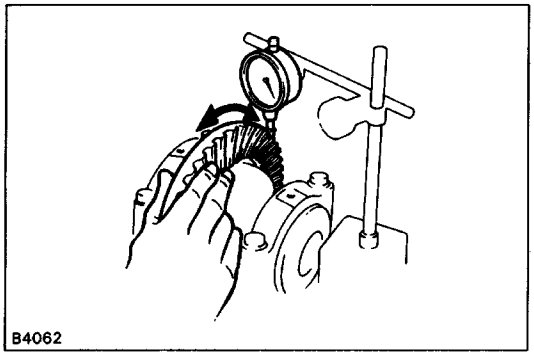

2. CHECK RING GEAR BACKLASH

If the backlash is not within specifications, adjust the side bearing preload or repair as necessary. (See step 8 on page SA–147)

Backlash: 0.13 – 0.18 mm (0.0051 – 0.0071 in.)

3. INSPECT TOOTH CONTACT BETWEEN RING GEAR AND DRIVE PINION (See step 9 on page SA–149)

Note the tooth contact position.

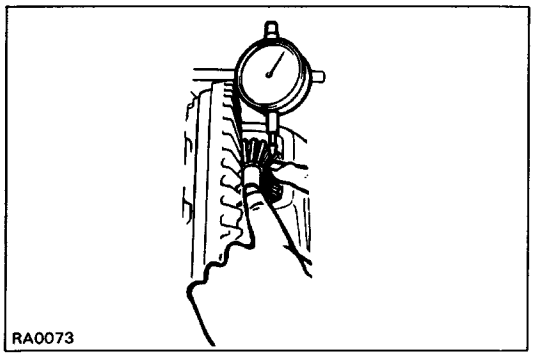

4. (2 PINION TYPE)

CHECK SIDE GEAR BACKLASH

Measure the side gear backlash while holding one pinion gear toward the case.

Standard backlash:

0.05 – 0.20 mm (0.0020 – 0.0079 in.)

If the backlash is not within specification, install the proper thrust washers.

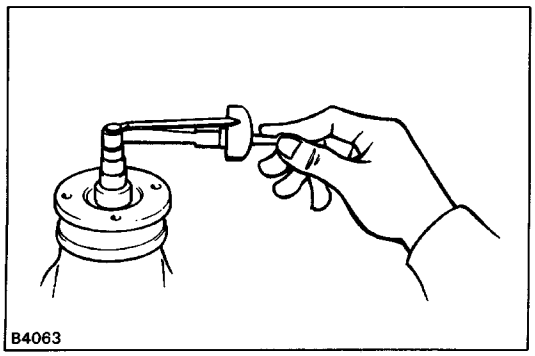

5. MEASURE DRIVE PINION PRELOAD

Using a torque meter, measure the preload of backlash between the drive pinion and ring gear.

Preload (starting):

7.5 in.

0.6 – 1.0 N–m (6 – 10 kgf–cm, 5.2 – 8.7 in.–lbf)

8 in.

(2 pinion type)

0.9 – 1.3 N–m (9 – 13 kgf–cm, 7.8 – 11.3 in.–lbf)

(4 pinion type)

0.5 – 0.8 N–m (5 – 8 kgf–cm, 4.3 – 6.9 in.–lbf)

6. CHECK TOTAL PRELOAD

Using a torque meter, measure the total preload.

Total preload (starting):

Add drive pinion preload

0.4 – 0.6 N–m (4 – 6 kgf–cm, 3.5 – 5.2 in.–lbf)

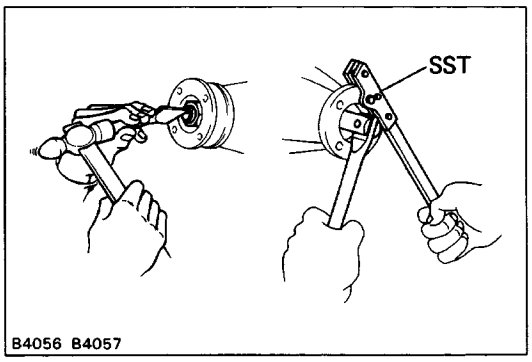

7. REMOVE COMPANION FLANGE

(a) Using a hammer and chisel, loosen the staked part of the nut.

(b) Using SST to hold the flange, remove the nut.
SST 09330–0002 1

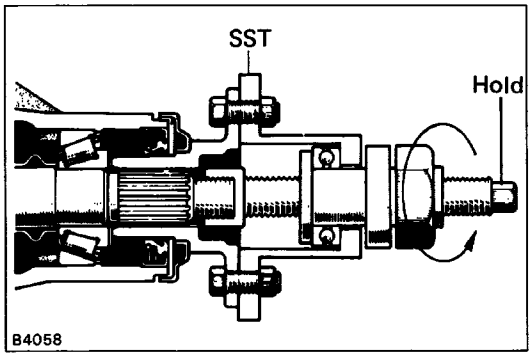

(c) Using SST, remove the companion flange.
SST 09557–22022
(7.5 in. 09557–22030)
(8 in. 09557–22050)

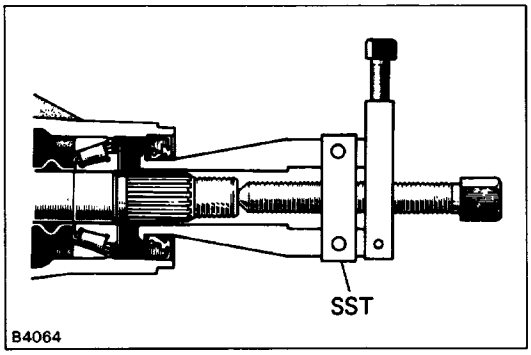

8. REMOVE OIL SEAL AND OIL SLINGER

(a) Using SST, remove the oil seal from the housing.
SST 09308–10010

(b) Remove the oil slinger.

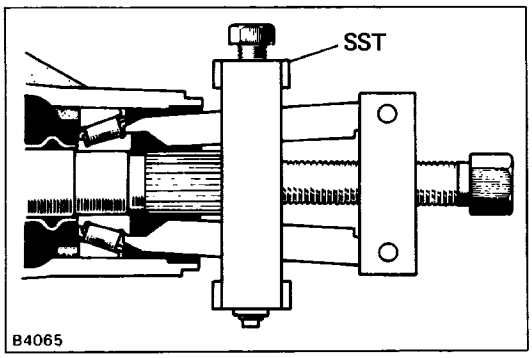

9. REMOVE FRONT BEARING AND BEARING SPACER

(a) Using SST, remove the front bearing from the drive pinion.
SST 09556–30010

(b) Remove the bearing spacer.
If the front bearing is damaged or worn, replace the bear–ing.

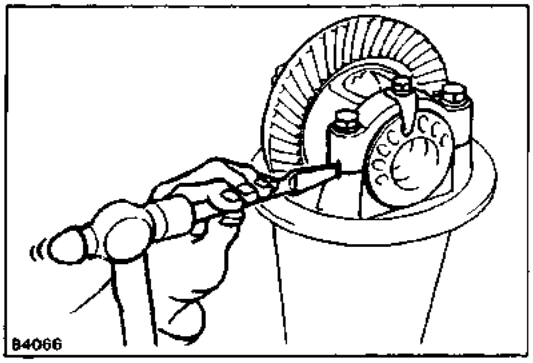

10. REMOVE DIFFERENTIAL CASE AND RING GEAR

(a) Place matchmarks on the bearing cap and differen– tial carrier.
(b) Remove the two adjusting nut locks.
(c) Remove the two bearing caps and two adjusting nuts.
(d) Remove the bearing outer races.
(e) Remove the differential case from the carrier.

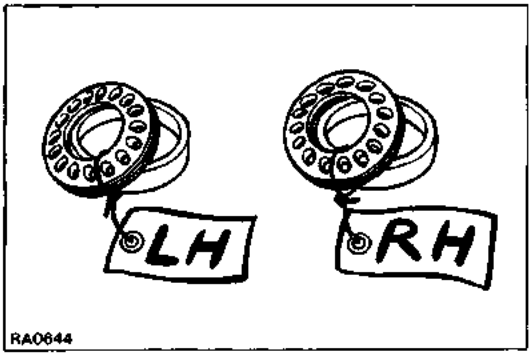

HINT: Tag the disassembled parts to show the location for reassembly.

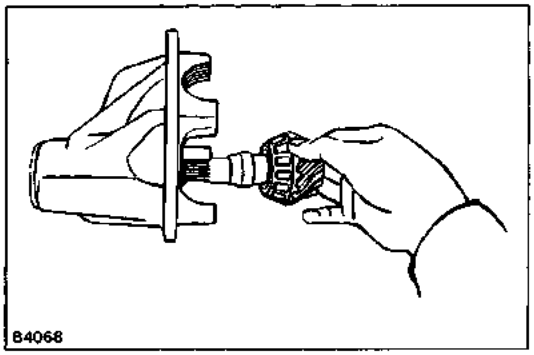

11. REMOVE DRIVE PINION FROM DIFFERENTIAL CARRIER

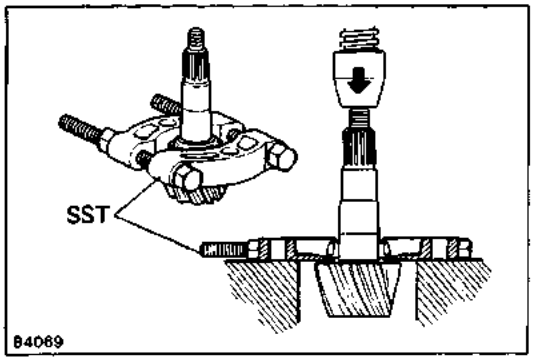

12. REPLACE DRIVE PINION REAR BEARING

(a) Using a press and SST, pull out the rear bearing from the drive pinion.
SST 09950–00020

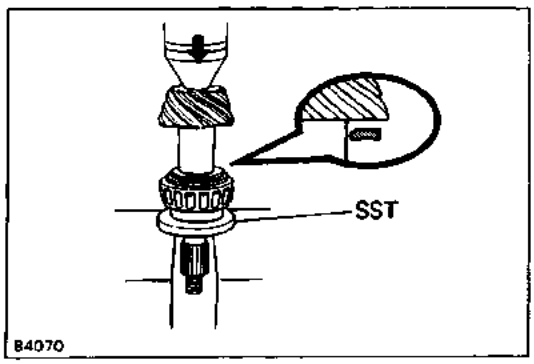

(b) Install the washer on the drive pinion with the cham– fered end facing the pinion gear.
(c) Using a press and SST, press the reused washer and new rear bearing on the drive pinion.
SST 09506–30012

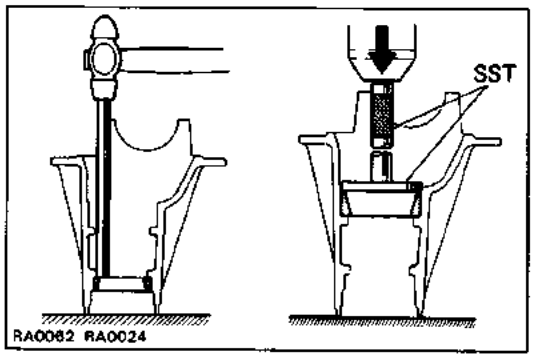

13. REPLACE DRIVE PINION FRONT AND REAR BEARING OUTER RACES

(a) Using a hammer and brass bar, drive out the outer race.

(b) Using a press and SST, drive in a new outer race.
SST
Front side 09608–35014 (09608–06020, 09608–06110)
Rear side
8 in. 4 pinion type
09608–35014 (09608–06020, 09608–06180)
Others 09608–35014 (09608–06020, 09608–06120)

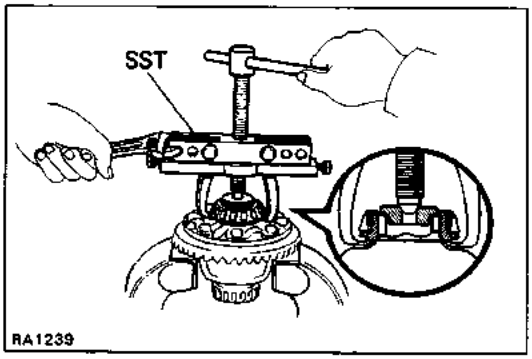

14. REMOVE SIDE BEARINGS FROM DIFFERENTIAL CASE

Using SST, pull the side bearing from the differential case.
SST 09950–20017
HINT: Fix the claws of SST to the notches in the differential case.

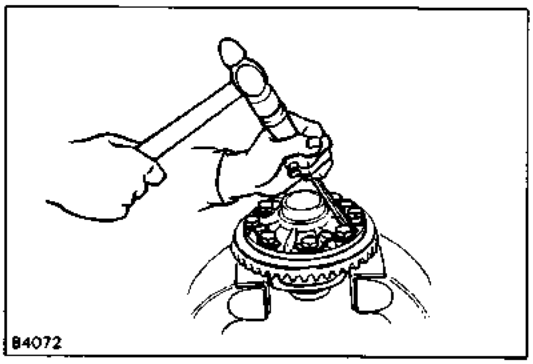

15. REMOVE RING GEAR

(a) Remove the ring gear set bolts and lock plates.

(b) Place alignment marks on the ring gear and differential case.

(c) Using plastic or copper hammer, tap on the ring gear to separate it from the differential case.

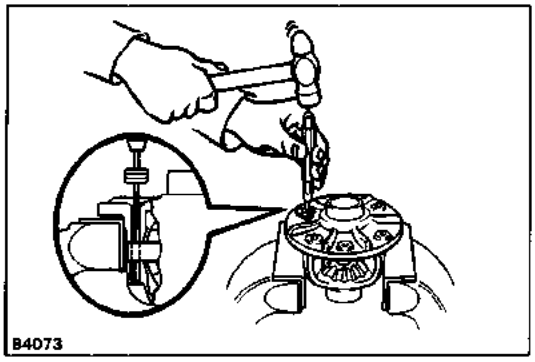

REPLACEMENT OF DIFFERENTIAL CASE COMPONENT PARTS
(2 Pinion Type)
1. DISASSEMBLE DIFFERENTIAL CASE

Using a hammer and punch, drive out the straight pin. Remove the pinion shaft, two pinion gears, two side gears and two thrust washers.

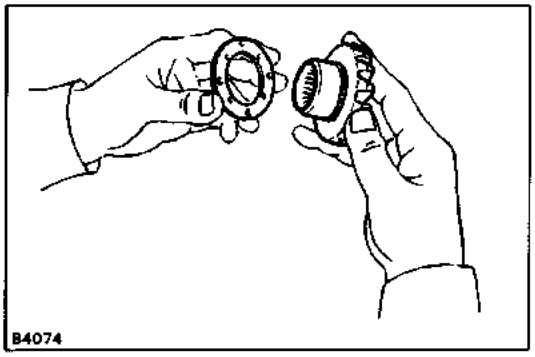

2. ASSEMBLE DIFFERENTIAL CASE

(a) Install the proper thrust washers and side gears.

Using the table below, select thrust washers which will ensure that the backlash is within specification.

Try to select washers of the same size for both sides.

Standard backlash: 0.05 – 0.20 mm
(0.0020 – 0.0079 in.)

Thrust washer thickness

7.5 in.		8 in.	
Thickness	mm (in.)	Thickness	mm (in.)
1.0	(0.039)	1.6	(0.063)
1.1	(0.043)	1.7	(0.067)
1.2	(0.047)	1.8	(0.071)
1.3	(0.051)		

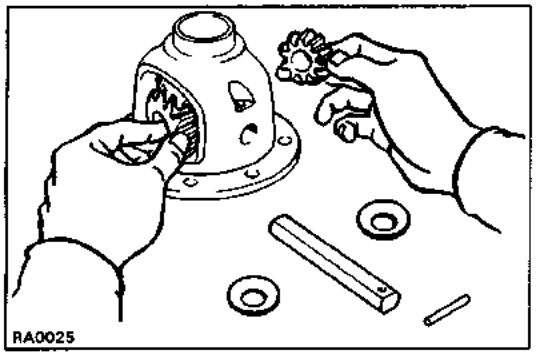

Install thrust washers and side gears in the differential case.

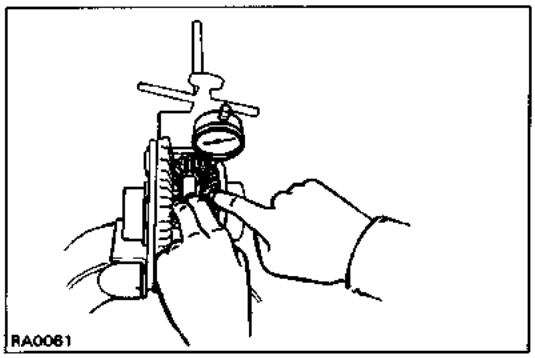

(b) Check the side gear backlash.

Measure the side gear backlash while holding one pinion gear toward the case.

Standard backlash: 0.05 – 0.20 mm
(0.0020 – 0.0079 in.)

If the backlash is not within specification, install a thrust washer of different thickness.

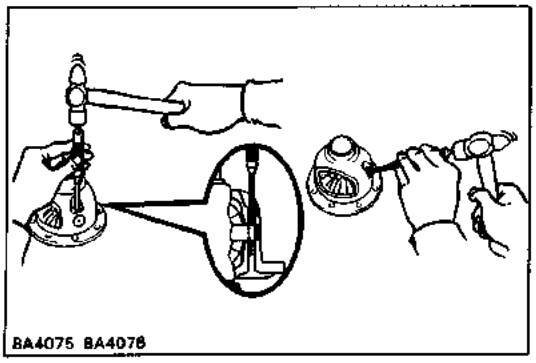

(c) Install the straight pin.

- Using the hammer and punch, drive the straight pin through the case and hole in the pinion shaft.
- Stake the pin and differential case.

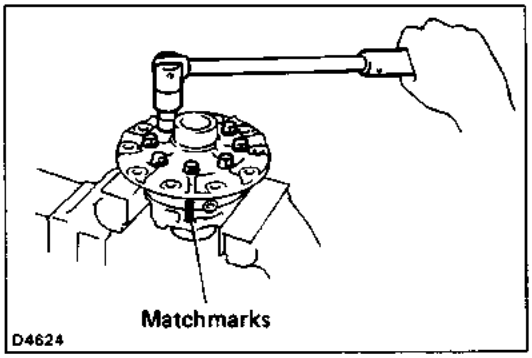

(4 Pinion Type)

1. DISASSEMBLE DIFFERENTIAL CASE

(a) Place the matchmarks on the LH and RH cases.

(b) Remove the eight bolts.

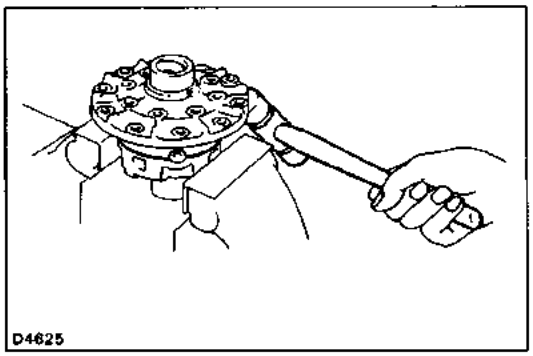

(c) Using a plastic hammer, separate the LH and RH cases.

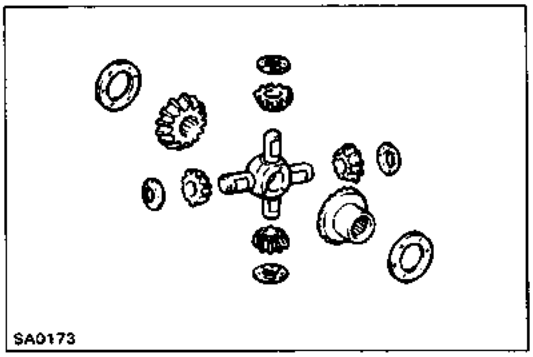

2. REMOVE FOLLOWING PARTS FROM CASE:

- Two side gears
- Two side gears thrust washers
- Spider
- Four pinion gears
- Four pinion gear thrust washers

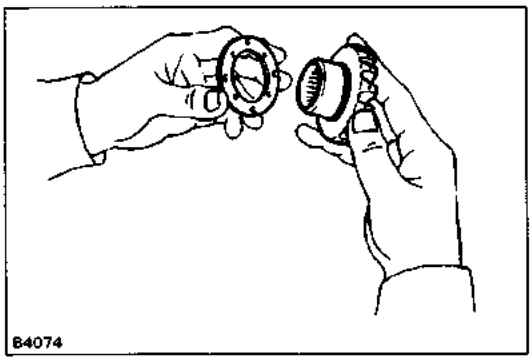

3. MEASURE SIDE GEAR BACKLASH

(a) Install the thrust washer to the side gear.

(b) Install the side gear to the RH case.

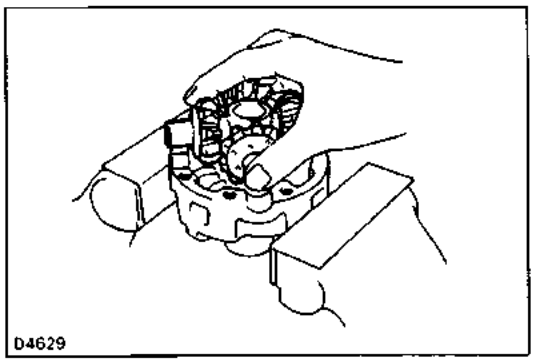

(c) Install the four pinion gears and thrust washers tc the spider.

(d) Install the pinion gear and spider to the RH case.

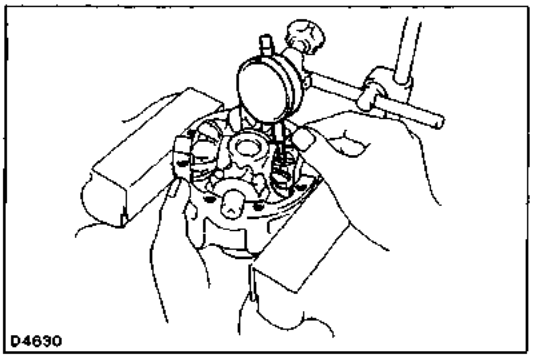

(e) Hold the side gear, measure the side gear backlash.
Backlash: 0.05 – 0.20 mm (0.0020 – 0.0079 in.)

HINT: Measure the backlash at the RH case at the LH case.

(f) If the backlash is not within specification, install a thrust washer of a different thickness.
HINT: Use washer of the same thickness on both the right and left sides.

Thickness mm (in.)			
0.9	(0.035)	1.2	(0.047)
1.0	(0.039)	1.3	(0.051)
1.1	(0.043)		

4. ASSEMBLE DIFFERENTIAL CASE

(a) Install the side gear and thrust washer to the RH case.
(b) Install the pinion gears and spider to the RH case.
(c) Install the side gear and thrust washer to the LH case.
(d) Apply gear oil to the each parts.

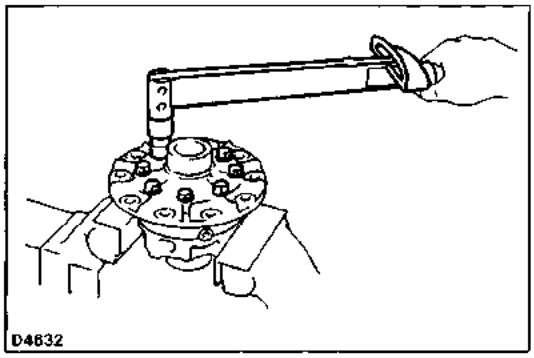

(e) Align the matchmarks on the LH and RH case.
(f) Torque the eight bolts.
Torque: 47 N–m (480 kgf–cm, 35 ft–lbf)

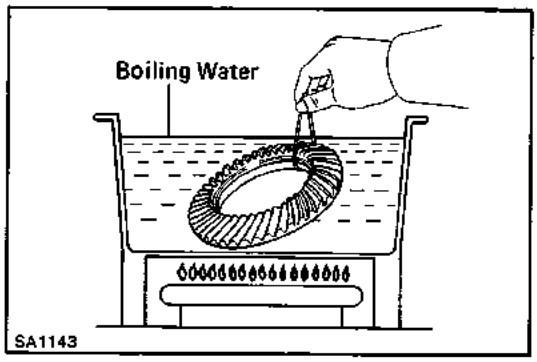

ASSEMBLY OF DIFFERENTIAL

1. INSTALL RING GEAR ON DIFFERENTIAL CASE

(a) Clean the contact surfaces of the differential case and ring gear.
(b) Heat the ring gear in boiling water.
(c) After the moisture on the ring gear has completely evaporated, quickly install the ring gear to the differential case.

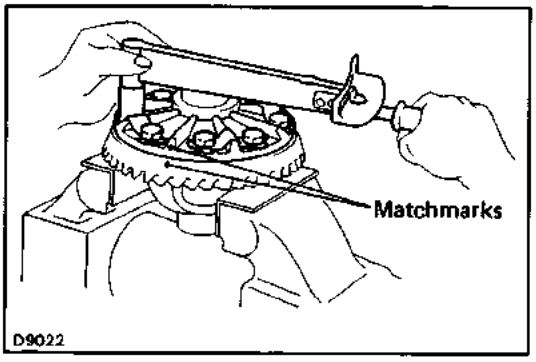

(d) Align the matchmarks on the ring gear and differential case.
(e) Coat the ring gear set bolts with gear oil.
(f) Temporarily install the lock plates and set bolts.
(g) After the ring gear cools down enough, tighten the set bolts uniformly and a little at a time.
Torque: 97 N–m (985 kgf–cm, 71 ft–lbf)

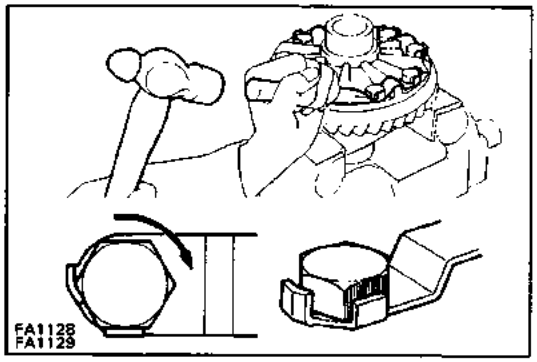

(h) Using a hammer and drift punch, stake the lock plates.
HINT: Stake one claw flush with the flat surface of the bolt. For the claw contacting the protruding portion of the bolt, stake only the half on the tightening side.

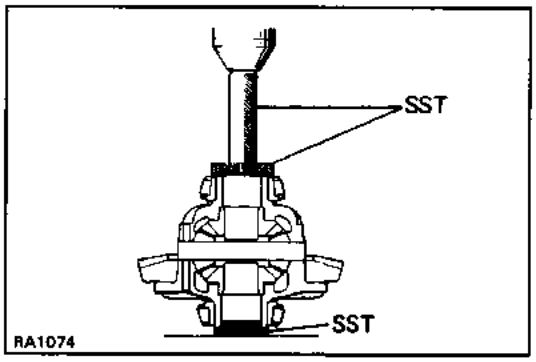

2. INSTALL SIDE BEARINGS

Using a press and SST, press the side bearings on the differential case.
SST 09550–10012
(09252–10010, 09557–10010, 09558–10010)

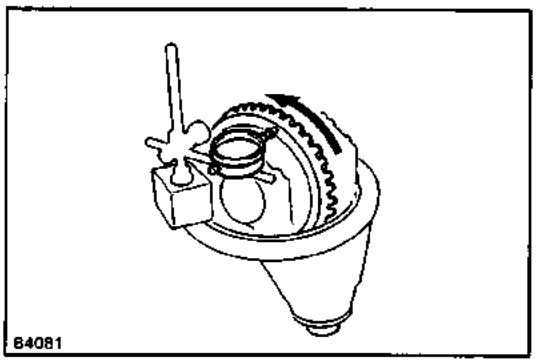

3. CHECK RING GEAR RUNOUT

(a) Install the differential case onto the carrier and tighten the adjusting nut just to where there is no play in the bearings.
(b) Check the ring gear runout.
Maximum runout:
7.5 in. 0.07 mm (0.0028 in.)
8 in. 0.10 mm (0.0039 in.)

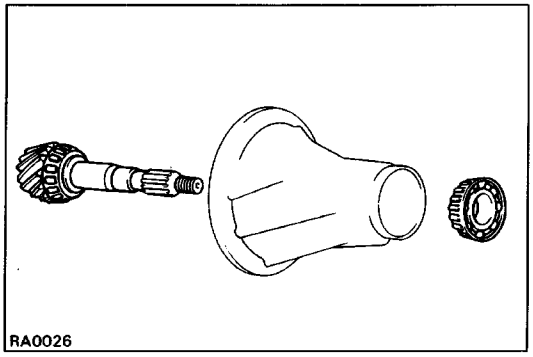

4. TEMPORARILY ADJUST DRIVE PINION PRELOAD

(a) Install the following parts.

- Drive pinion
- Front bearing

HINT: Assemble the spacer, oil slinger and oil seal after adjusting the gear contact pattern.

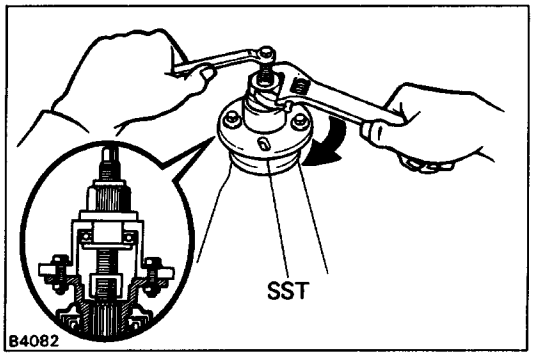

(b) Install the companion flange with SST.
SST 09557–22022
(7.5 in. 09557–22030)
(8 in. 09557–22050)

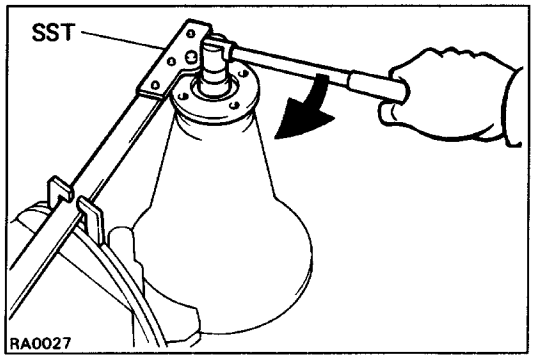

(c) Adjust the drive pinion preload by tightening the companion flange nut.
Using SST to hold the flange, tighten the nut.
SST 09330–00021
NOTICE: As there is no spacer, tighten a little at a time, being careful not to overtighten.

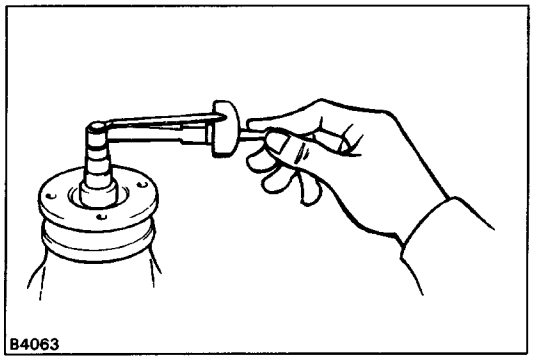

(d) Using a torque meter, measure the preload.
Preload (starting):
New bearing
7.5 in.
1.2 – 1.9 N –m
(12 – 19 kgf–cm, 10.4 – 16.5 in. –lbf)
8 in.
(2 pinion type)
1.9 – 2.5 N–m
(19 – 25 kgf–cm, 16.5 – 22.6 in. –lbf)
(4 pinion type)
1.0 – 1.6 W
(10 – 16 kgf–cm, 8.7 – 13.9in. –lbf)
Reused bearing
7.5 in.
0.6 – 1.0 N–m
(6 – 10 kgf–cm, 5.2 – 8.7 in. –lbf)
8 in.
(2 pinion type)
0.9 – 1.3 N –m
(9 – 13 kgf– cm, 7.8 – 11.3 in.–lbf)
(4 pinion type)
0.5 – 0.8 N–
(5 – 8 kgf –cm, 4.3 – 6.9 in. –lbf)

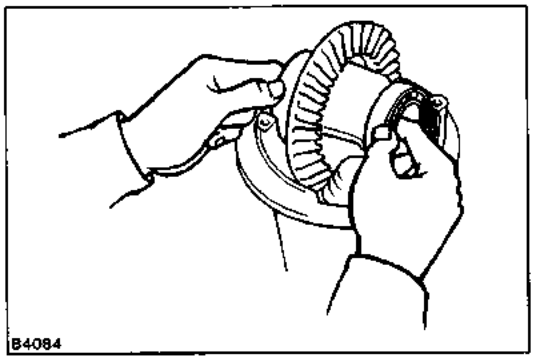

5. INSTALL DIFFERENTIAL CASE IN CARRIER

(a) Place the bearing outer races on their respective bearings. Make sure the left and right outer races are not interchanged.

(b) Install the case in the carrier.

HINT: Make sure that there is backlash between the ring gear and drive pinion.

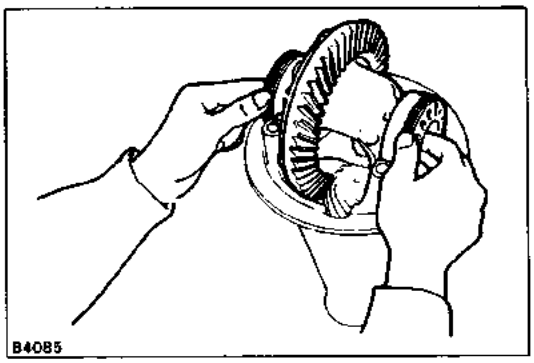

6. INSTALL ADJUSTING NUTS

Install the adjusting nuts on the carrier, making sure the nuts are threaded properly.

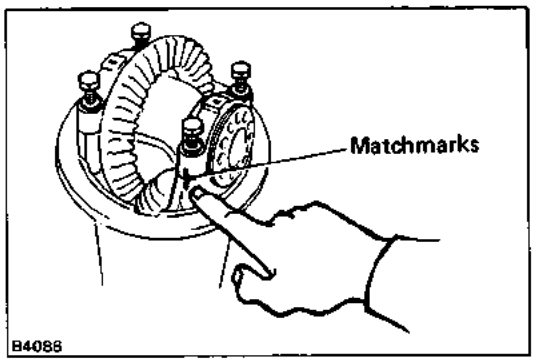

7. INSTALL BEARING CAPS

Align the matchmarks on the cap and carrier. Screw in the two bearing cap bolts two or three turns and press down the bearing cap by hand.

HINT: If the bearing cap does not fit tightly on the car–rier, the adjusting nuts are not threaded properly. Reinstall the adjusting nuts if necessary.

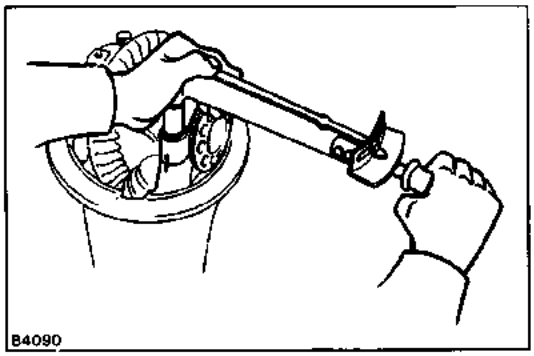

8. ADJUST SIDE BEARING PRELOAD

(a) Tighten the four bearing cap bolts to the specified torque, then loosen them to the point where they can be turned by hand.

Torque: 78 N–m (800 kgf–cm, 58 ft–lbf)

(b) Fully tighten the four bearing cap bolts by hand.

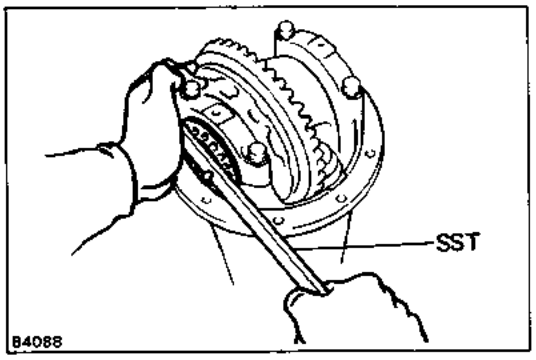

(c) Using SST, tighten the adjusting nut on the ring gear side until the ring gear has a backlash of about 0.2 mm (0.008 in.)

SST 09 504–00011

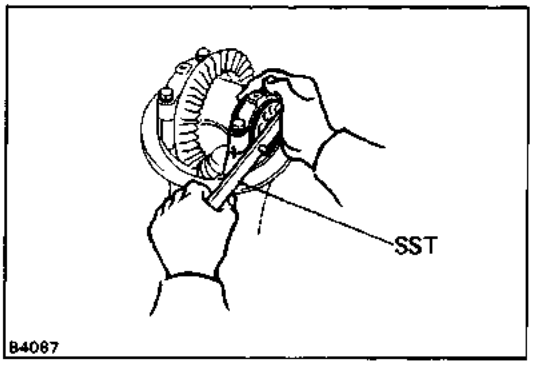

(d) While turning the ring gear, use SST to fully tighten the adjusting nut on the drive pinion side. After the bearings are settled, loosen the adjusting nut on the drive pinion side.
SST 09504–00011

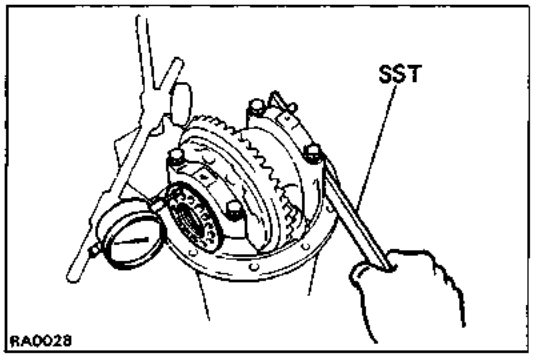

(e) Place a dial indicator on the top of the adjusting nut on the ring gear side.
(f) Adjust the side bearing for zero preload by tightening the other adjusting nut until the pointer on the indicator begins to move.

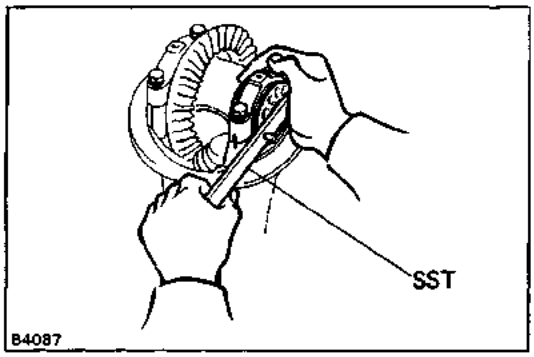

(g) Tighten the adjusting nut 1 – 1’I2 notches from the zero preload position.

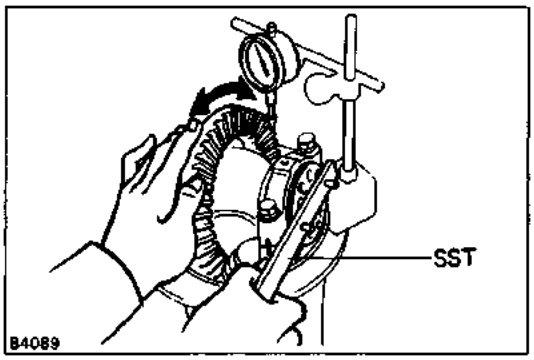

(h) Using a dial indicator, adjust the ring gear backlash until it is within specification.
Backlash: 0.13 – 0.18 mm (0.0051 – 0.0071 in.)
HINT: The backlash is adjusted by turning the left and right adjusting nuts equal amounts. For example, loosen the nut on the left side one notch and tighten the nut on the right side one notch.

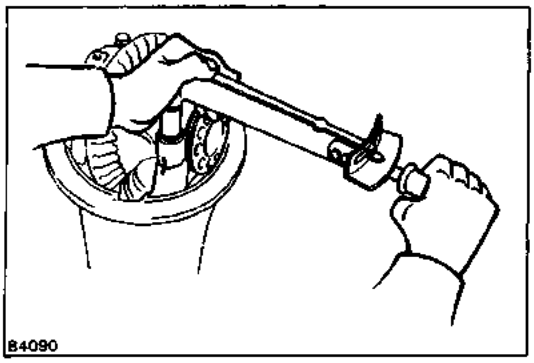

(i) Torque the bearing cap bolts.
Torque: 78 N–m (800 kgf–cm, 58 ft–lbf)
(j) Recheck the ring gear backlash.
Backlash: 0.13 – 0.18 mm (0.0051 – 0.0071 in.)

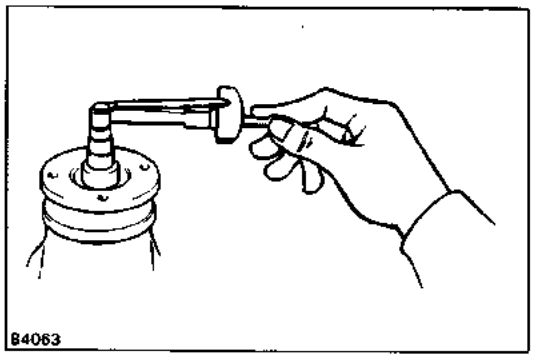

(k) Using a torque meter, measure the total preload.

Total preload (starting):

Add drive pinion preload

0.4 – 0.6 N–m

(4 – 6 kgf –cm, 3.5 – 5.2 in.–lbf)

Backlash: 0.13 – 0.18 mm (0.0051 – 0.0071 in.)

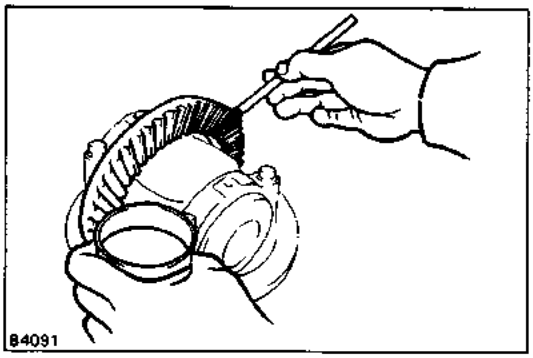

9. INSPECT TOOTH CONTACT BETWEEN RING GEAR AND DRIVE PINION

(a) Coat 3 or 4 teeth at three different positions on the ring gear with red lead.

(b) Hold the companion flange firmly and rotate the ring gear in both directions.

(c) Inspect the tooth pattern.

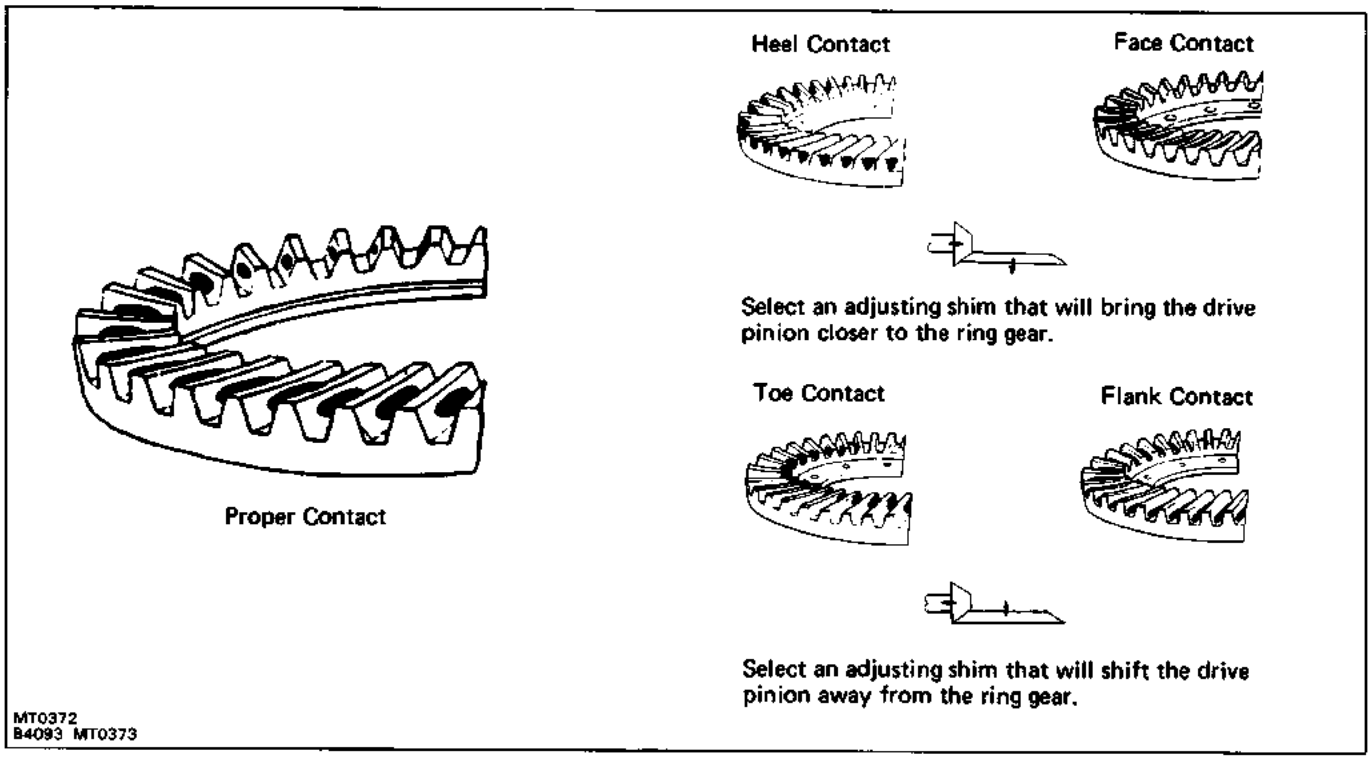

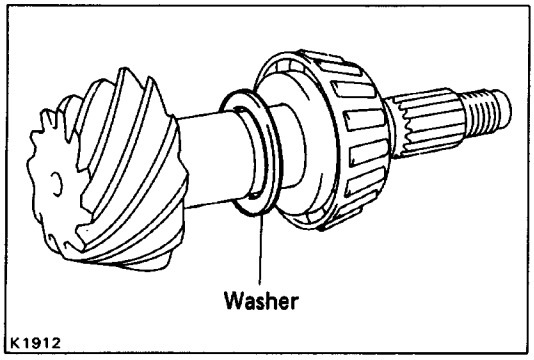

If the teeth are not contacting properly, use the following chart to select a proper washer for correction.

Washer thickness

7.5 in.		8 in.	
Thickness	mm (in.)	Thickness	mm (in.)
2.24	(0.0882)	1.70	(0.0669)
2.27	(0.0894)	1.73	(0.0681)
2.30	(0.0906)	1.76	(0.0693)
2.33	(0.0917)	1.79	(0.0705)
2.36	(0.0929)	1.82	(0.0717)
2.39	(0.0941)	1.85	(0.0728)
2.42	(0.0953)	1.88	(0.0740)
2.45	(0.0965)	1.91	(0.0752)
2.48	(0.0976)	1.94	(0.0764)
2.51	(0.0988)	1.97	(0.0776)
2.54	(0.1000)	2.00	(0.0787)
2.57	(0.1012)	2.03	(0.0799)
2.60	(0.1024)	2.06	(0.0811)
2.63	(0.1035)	2.09	(0.0823)
2.66	(0.1047)	2.12	(0.0835)
2.69	(0.1059)	2.15	(0.0846)
2.72	(0.1071)	2.18	(0.0858)
		2.21	(0.0870)
		2.24	(0.0882)
		2.27	(0.0894)
		2.30	(0.0906)
		2.33	(0.0917)

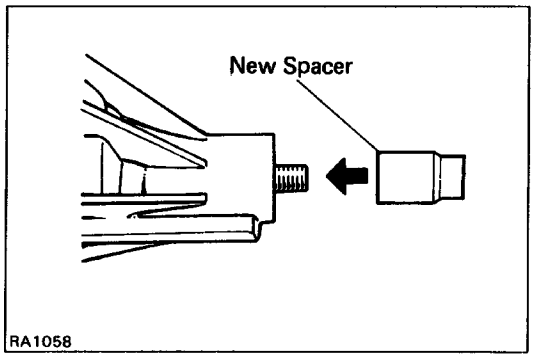

10. REMOVE COMPANION FLANGE

(See step 7 on page SA–138)

11 REMOVE FRONT BEARING

(See step 9 on page SA–138)

12. INSTALL NEW BEARING SPACER AND FRONT BEARING

(a) Install a new bearing spacer on the shaft.

(b) Install the front bearing on the shaft.

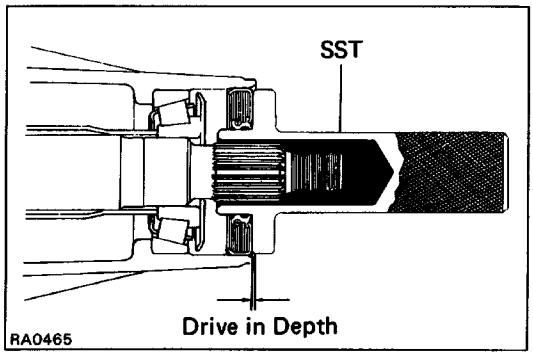

13. INSTALL OIL SLINGER AND NEW OIL SEAL

(a) Install the oil slinger facing as shown.

(b) Using SST, drive in a new oil seal as shown.

SST 09554–30011

Oil seal drive in depth:

7.5 in. 1.5 mm (0.059 in.)

8 in. 1.0 mm (0.039 in.)

(c) Apply MP grease to the oil seal lip.

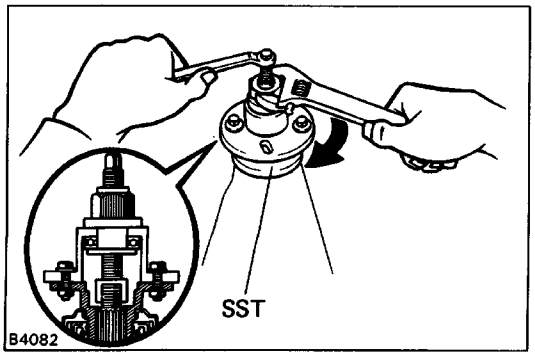

14. INSTALL COMPANION FLANGE

(a) Install the companion flange with SST.

SST 09557–22022

(7.5 in. 09557–22030)

(8 in. 09557–22050)

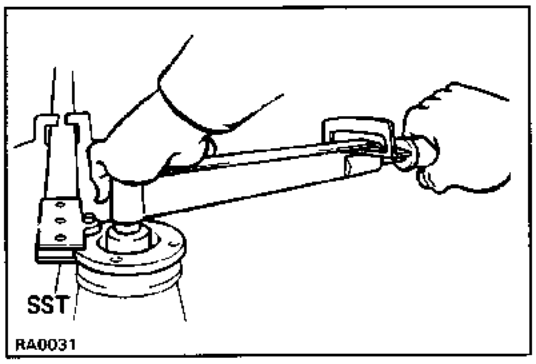

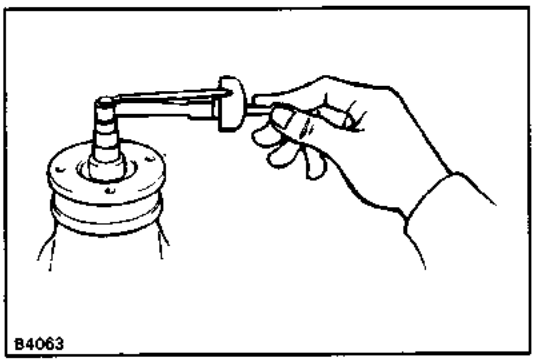

(b) Coat the threads of a new nut with MP grease.

(c) Using SST to hold the flange, tighten the nut.

SST 09330–00021

Torque:

7.5 in.

108 N–m (1,100 kgf–cm, 80 ft–lbf)

8 in.

196 N–m (2,000 kgf–cm, 145 ft–lbf)

15. ADJUST DRIVE PINION PRELOAD

Using a torque meter, measure the preload of the back–lash between the drive pinion and ring gear.

Preload (starting):

New bearing

7.5 in.

1.2 – 1.9 N–m

(12 – 19 kgf–cm, 10.4 – 16.5 in.–lbf)

8 in.

(2 pinion type)

1.9 – 2.5 N–m

(19 – 26 kgf–cm, 16.5 – 22.6–lbf)

(4 pinion type)

1.0 – 1.6 N–m

(10 – 16 kgf–cm, 8.7 – 13.9 in.–lbf)

Reused bearing

7.5 in.

0.6 – 1.0 N–m

(6 – 10 kgf–cm, 5.2 – 8.7 in.–lbf)

8 in.

(2 pinion type)

0.9 – 1.3 N–m

(9 – 13 kgf–cm, 7.8 – 11.3 in.–lbf)

(4 pinion type)

0.5 – 0.8 N–m

(5 – 8 kgf –cm, 4.3 – 6.9 in.–lbf)

(a) If preload is greater than specification, replace the bearing spacer.

(b) If preload is less than specification, retighten the nut 13 N–m (130 kgf–cm, 9 ft–lbf) a little at a time until the specified preload is reached.

Maximum torque:

7.5 in.

235 N–m (2,400 kgf–cm, 174 ft–lbf)

8 in.

343 N–m (3,500 kgf–cm, 253 ft–lbf)

If the maximum torque is exceeded while retightening the nut, replace the bearing spacer and repeat the preload procedure. Do not back off the pinion nut to reduce the preload.

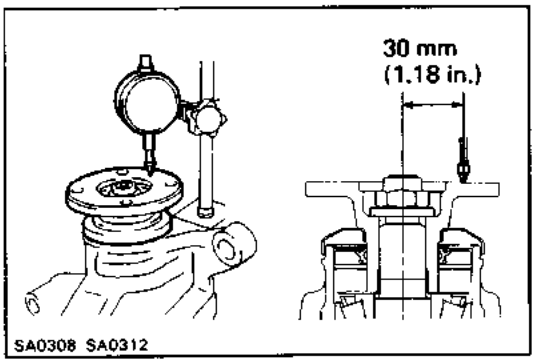

16. CHECK RUNOUT OF COMPANION FLANGE

Maximum vertical runout: 0.10 mm (0.0039 in.)

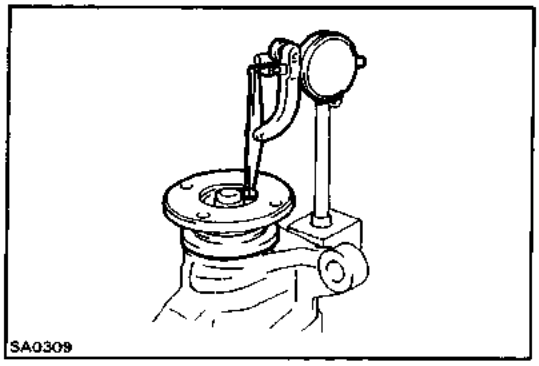

Maximum lateral runout: 0.10 mm (0.0039 in.)

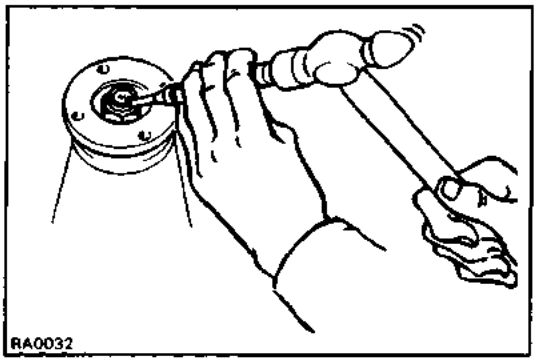

17. STAKE DRIVE PINION NUT

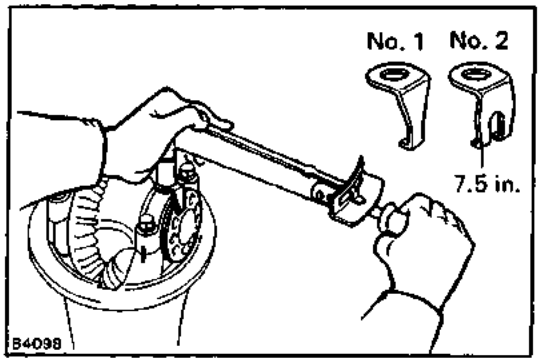

18. INSTALL ADJUSTING NUT LOCKS

(a) (7.5 in.)

Select either a lock No. 1 or No. 2, whichever will fit the adjusting nuts.

(b) Install the lock on the bearing caps.

Torque: 13 N–m (130 kgf–cm, 9 ft–lbf)

INSTALLATION OF DIFFERENTIAL

(See page SA–134)

1. INSTALL A NEW GASKET

2. INSTALL DIFFERENTIAL CARRIER ASSEMBLY

Install the differential carrier assembly in the axle and in–stall the 10 nuts. Torque the nuts.

Torque: Single tire 25 N–m (250 kgf–cm, 18 ft–lbf)
Double tire 31 N–m (315 kgf–cm, 23 ft–lbf)

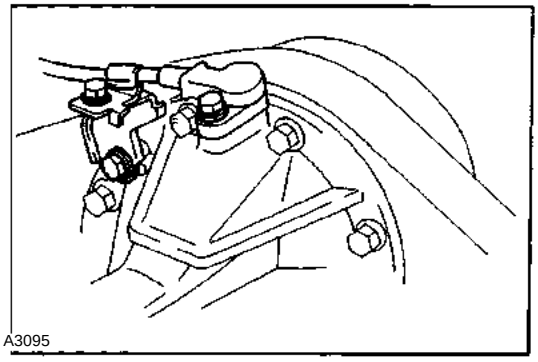

3. (w/ REAR–WHEEL ANTI–LOCK BRAKE SYSTEM) CONNECT SPEED SENSOR

Connect the speed sensor with the two bolts.

Torque: 19 N–m (195 kgf–cm, 14 ft–lbf)

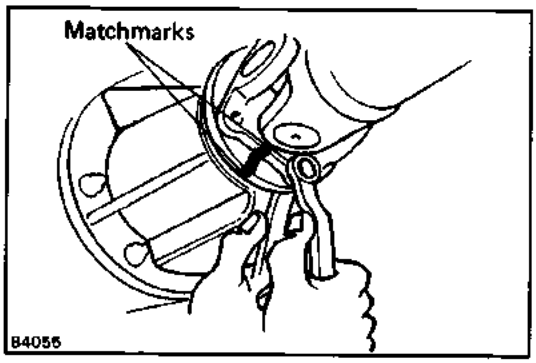

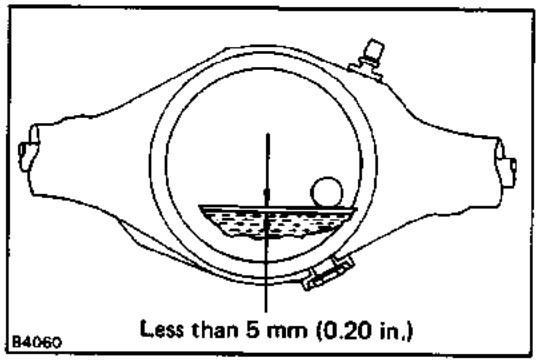

4. CONNECT PROPELLER SHAFT FLANGE TO COMPANION FLANGE

(a) Align the matchmarks on the flanges and connect the flanges with four bolts and nuts.

(b) Torque the bolts and nuts.

Torque: 4WD 3VZ–E [MT]
76 N–m (780 kgf–cm, 56 ft–lbf)
Ex. 4WD 3VZ–E [MT]
74 N–m (750 kgf–cm, 54 ft–lbf)

5. INSTALL DRAIN PLUG AND FILL DIFFERENTIAL WITH GEAR OIL

Oil type: APL GL–5 hypoid gear oil
Viscosity: Above – 180C (0°F) SAE 90
Below – 180C (0° F)
SAE 80w or 80W–90

Capacity:

liters (US qts, Imp. qts)

2W D	7.5 in.	2 pinion	1.35 (1.43, 1.19)
	8 in.	2 pinion	1.8 (1.9, 1.6)
		4 pinion	2.2 (2.3, 1.9)
4WD	8 in.	2 pinion	2.2 (2.3, 1.9)
		4 pinion	2.2 (2.3, 1.9)

Torque the filler plug.

Torque: 49 N–m (500 kgf–cm, 36 ft–lbf)

REAR SUSPENSION

Shock Absorber

COMPONENTS

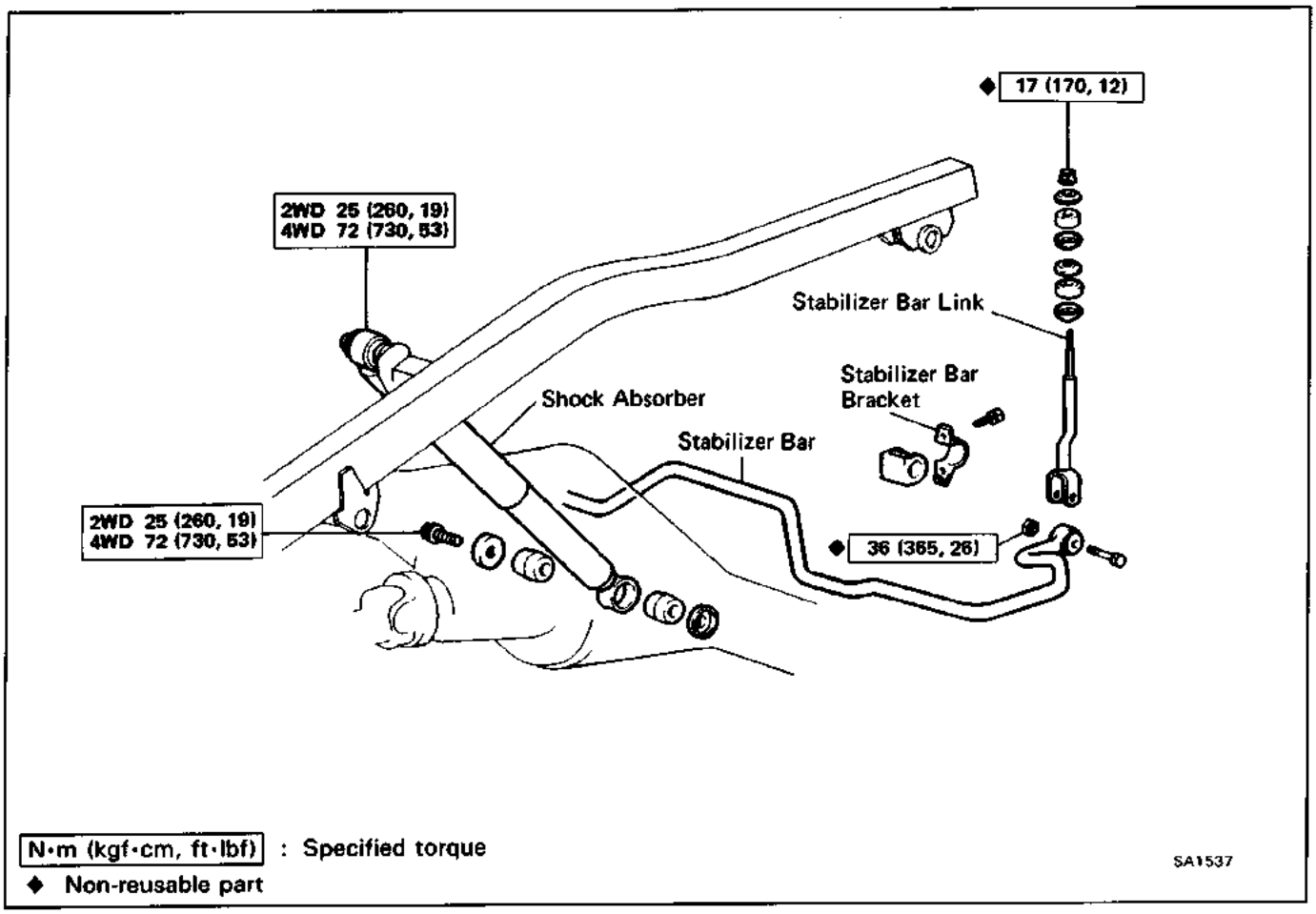

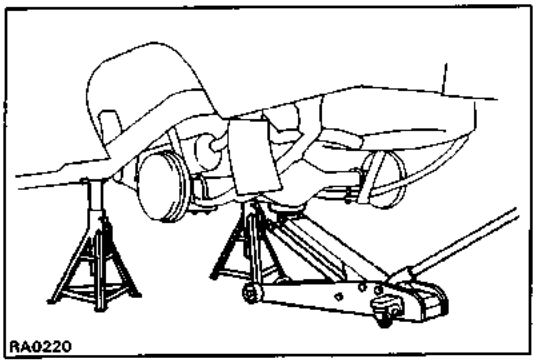

REMOVAL OF SHOCK ABSORBER

1. JACK UP AND SUPPORT BODY

(a) Jack up and support the body on stands.

(b) Lower the axle housing until the leaf spring tension is free, and keep it at this position.

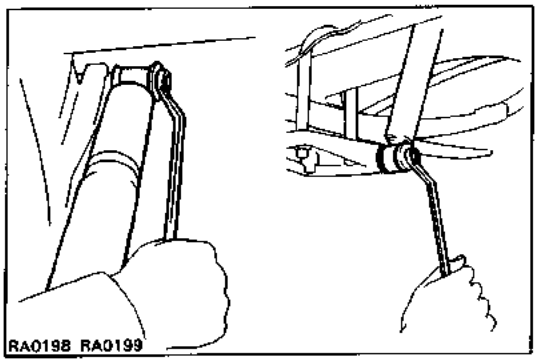

2. REMOVE SHOCK ABSORBER

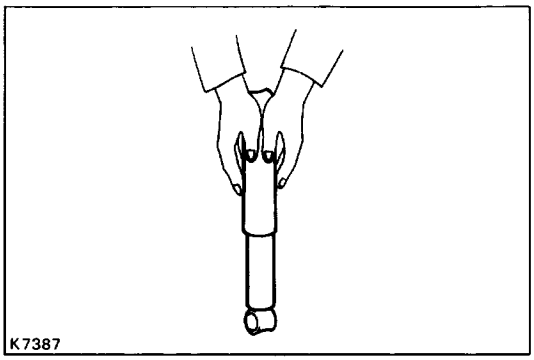

INSPECTION OF SHOCK ABSORBER

1. INSPECT SHOCK ABSORBER

Compress and extend the shock absorber and check that there is no abnormal resistance or unusual operation sounds.

If there is any abnormality, replace the shock absorber with new one.

NOTICE: When discarding the shock absorber, use the following procedure.

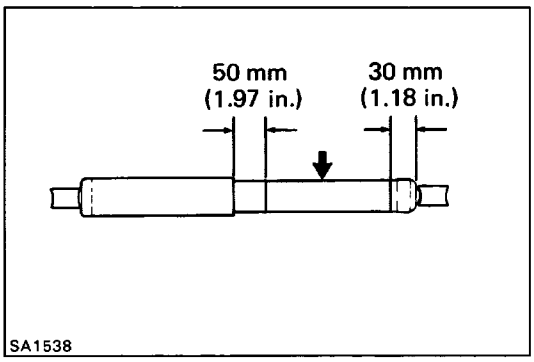

DISPOSAL OF SHOCK ABSORBER

1. FULLY EXTEND SHOCK ABSORBER

2. DRILL HOLE TO REMOVE GAS FROM CYLINDER

Using a drill, make a hole in the cylinder as shown to re–move the gas inside.

CAUTION: The gas coming out is harmless, but be care–ful of chips which may fly up when drilling.

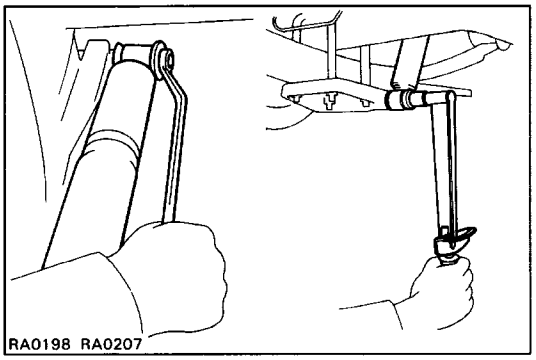

INSTALLATION OF SHOCK ABSORBER

INSTALL REAR SHOCK ABSORBER

(a) Connect the shock absorber to the frame with the bolt. Tighten the bolt.

Torque: 2WD 25 N–m (260 kgf–cm, 19 ft–lbf)
4WD 72 N–m (730 kgf–cm, 53 ft–lbf)

(b) Connect the shock absorber to the spring seat with the bolt. Tighten the bolt.

Torque: 2WD 25 N–m (260 kgf–cm. 19 ft–lbf)
4WD 72 N–m (730 kgf–cm. 53 ft–lbf)

Leaf Spring

COMPONENTS

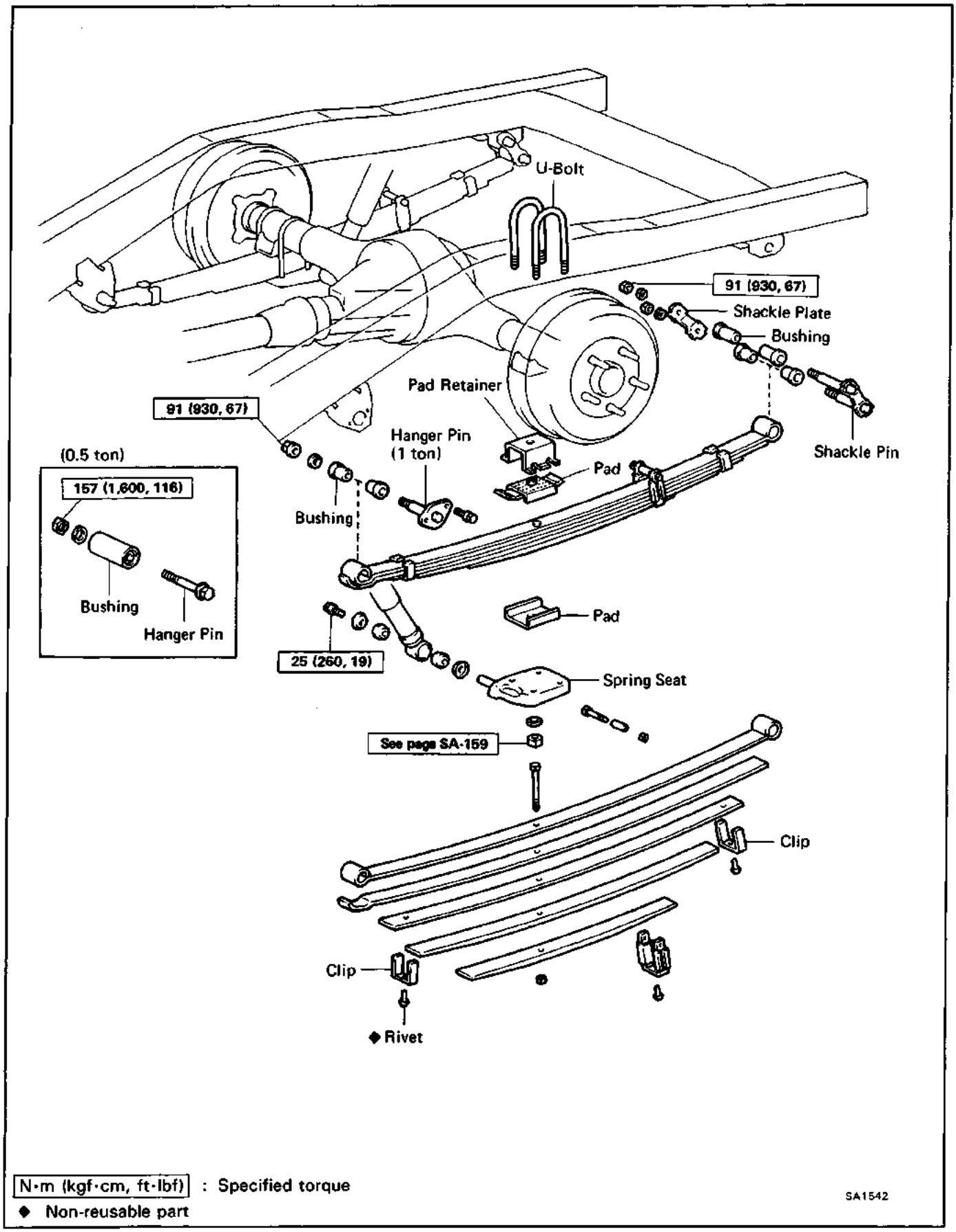

COMPONENTS

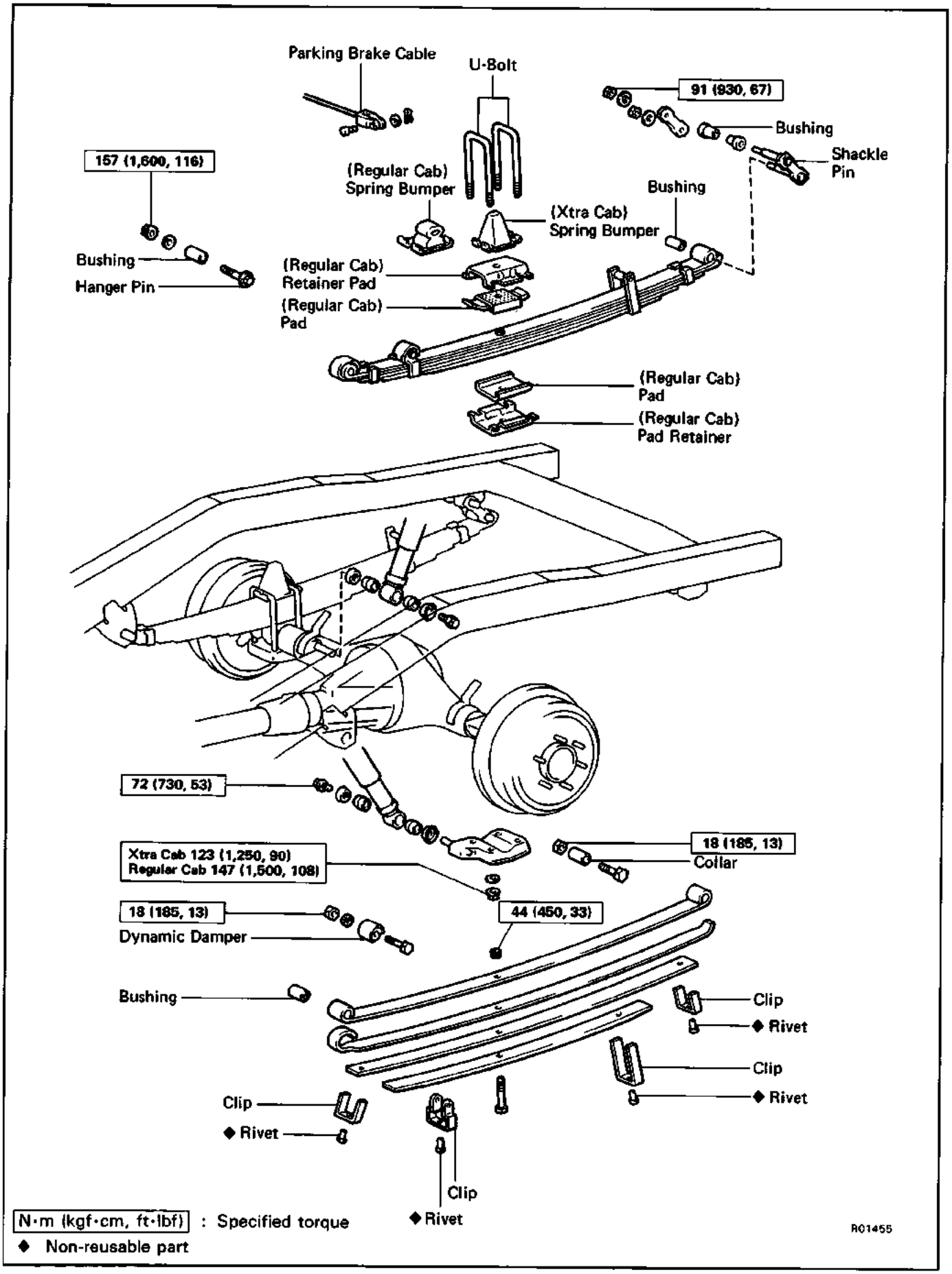
Parking Brake Cable
U-Bolt
91 (930, 67)
Bushing
Shackle Pin
157 (1,600, 116)
(Regular Cab) Spring Bumper
Bushing
(Xtra Cab) Spring Bumper
Bushing
Hanger Pin
(Regular Cab) Retainer Pad
(Regular Cab) Pad
(Regular Cab) Pad
(Regular Cab) Pad Retainer
72 (730, 53)
Xtra Cab 123 (1,250, 90)
Regular Cab 147 (1,500, 108)
18 (185, 13)
Collar
18 (185, 13)
Dynamic Damper
44 (450, 33)
Bushing
Clip
◆ Rivet
Clip
◆ Rivet
Clip
◆ Rivet
Clip
◆ Rivet
N·m (kgf·cm, ft·lbf) : Specified torque
◆ Non-reusable part
R01455

REMOVAL OF LEAF SPRING

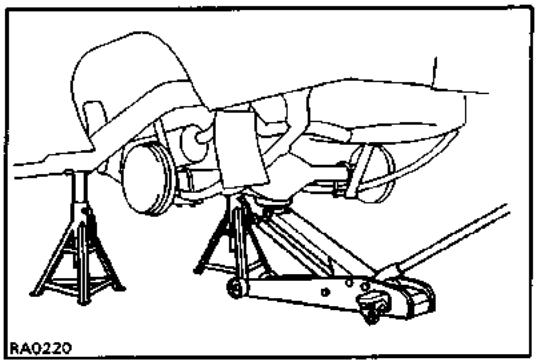

1. JACK UP AND SUPPORT BODY

(a) Jack up and support the body on the stands.

(b) Lower the axle housing until the leaf spring tension is free, and keep it at this position.

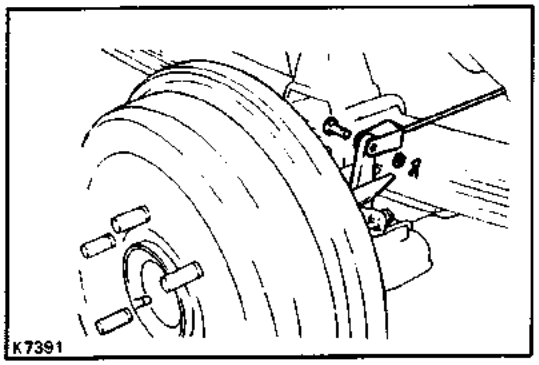

2. (4WD)

DISCONNECT PARKING CABLE

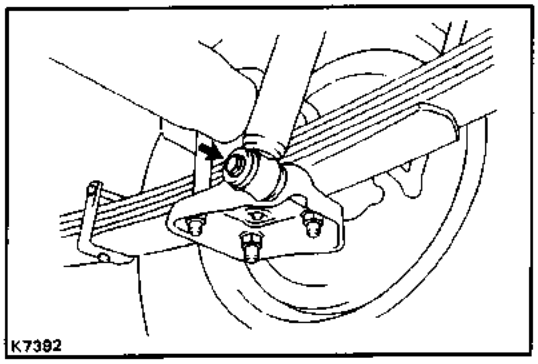

3. DISCONNECT SHOCK ABSORBER FROM SPRING SEAT

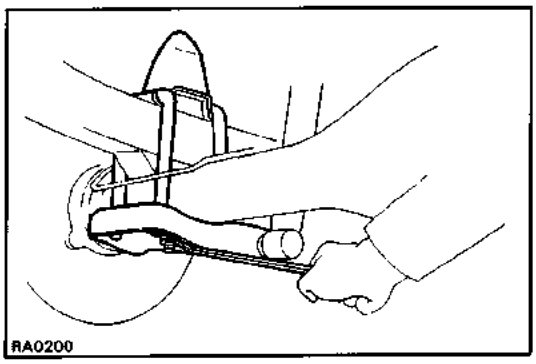

4. REMOVE U–BOLTS

(a) Remove the U–bolt mounting nuts.

(b) Remove the spring seat, pads and pad retainer.

(c) Remove the U–bolts.

(d) (4WD)

Remove the spring bumper.

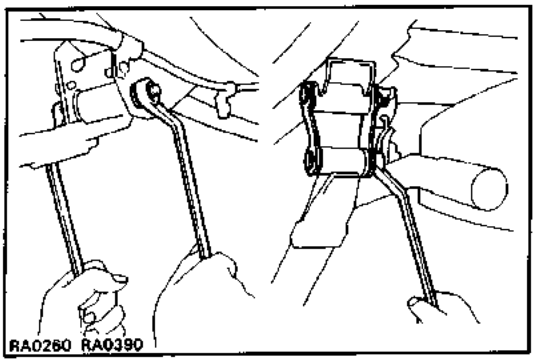

5. REMOVE LEAF SPRING

(a) Remove the hanger pin bolt.

(b) (1 ton and C&C)

Remove the hanger pin lock bolt.

(c) Disconnect the leaf from the bracket.

(d) Remove the shackle pin mounting nuts.

(e) Remove the shackle pin and plate and remove the leaf spring.

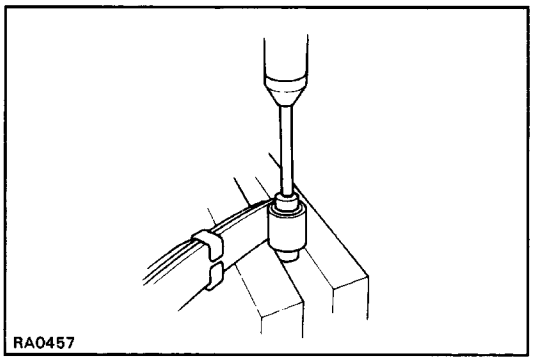

REPLACEMENT OF BUSHING

REPLACE BUSHINGS WITH PRESS

Using a press and socket wrench, replace the eye bush–ings.

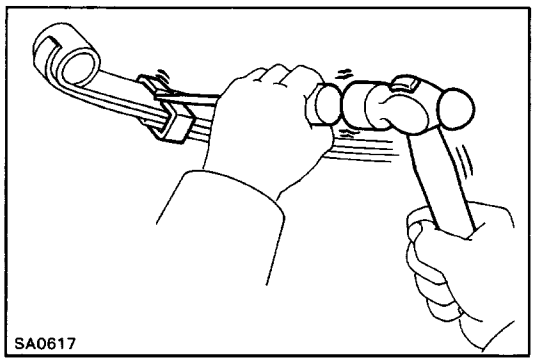

REPLACEMENT OF LEAF SPRING

1. BEND OPEN SPRING CLIP

Using a chisel, pry up the spring clip.

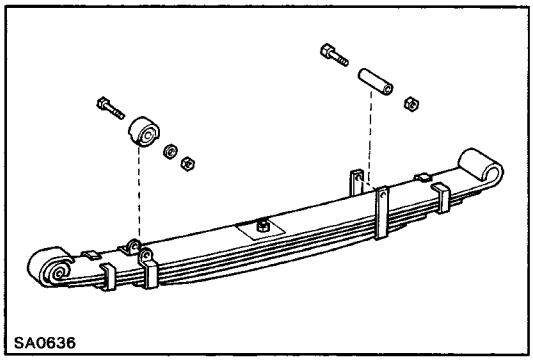

2. REMOVE CLIP BOLT

Remove the clip bolt, collar and nut from the clip.

3. REMOVE DYNAMIC DAMPER

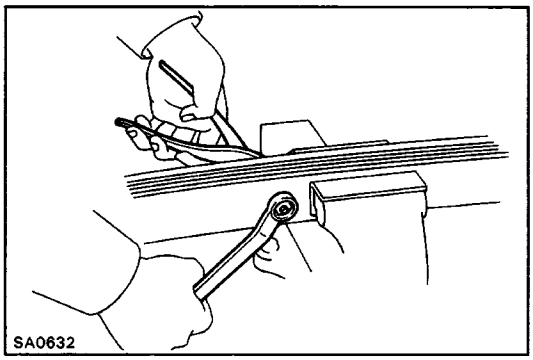

4. REMOVE CENTER BOLT

Hold the spring near the center bolt in a vise and remove the center bolt.

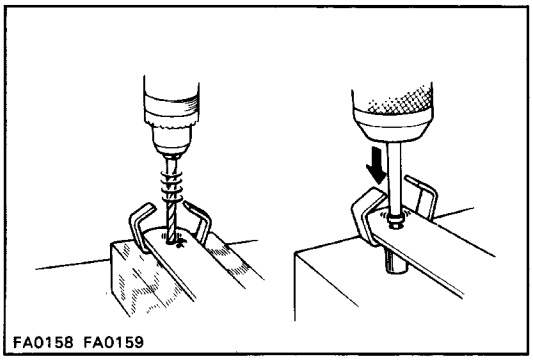

5. IF NECESSARY, REPLACE SPRING CLIP

(a) Drill off the head of the rivet, and drive it out.

(b) Install a new rivet into the holes of the spring leaf and clip. Then rivet with a press.

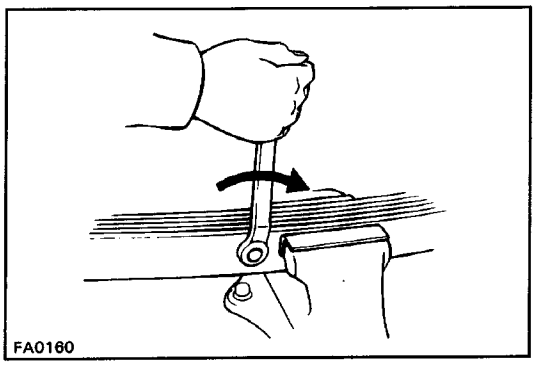

6. INSTALL SPRING CENTER BOLT

(a) Align the leaf holes and secure the leaves with a vise.

(b) Install and tighten the spring center bolt.

Torque: 44 N–m (450 kgf–cm, 33 ft–lbf)

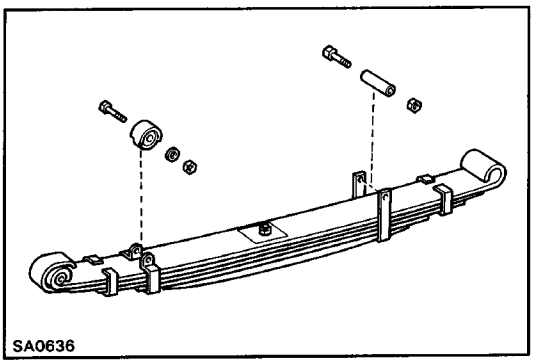

7. INSTALL CLIP BOLT

Position the collar and install the clip bolt and nut.

Torque: 18 N–m (185 kgf–cm, 13 ft–lbf)

8. INSTALL DYNAMIC DAMPER

Position the dynamic damper and install the bolt and nut.

Torque: 18 N–m (185 kgf–cm, 13 ft–lbf)

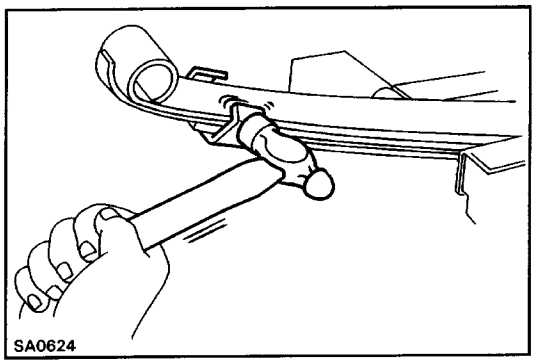

9. BEND SPRING CLIP

Using a hammer, bend the spring clip into position.

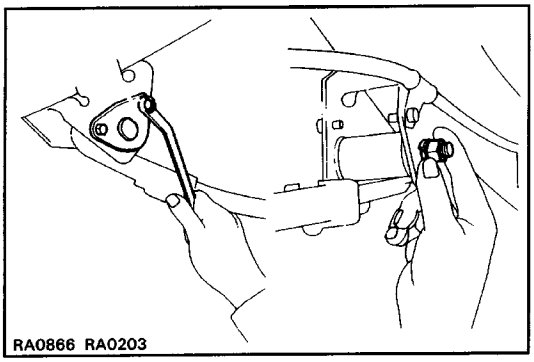

INSTALLATION OF LEAF SPRING

1. INSTALL LEAF SPRING

(a) Place the front end of leaf spring in the front bracket and install the hanger pin bolt.

(b) (1 ton and C&C)

Install and tighten the hanger pin lock bolt.

Torque: 13 N–m (130 kgf–cm, 9 ft–lbf)

(c) Finger tighten the hanger pin nut.

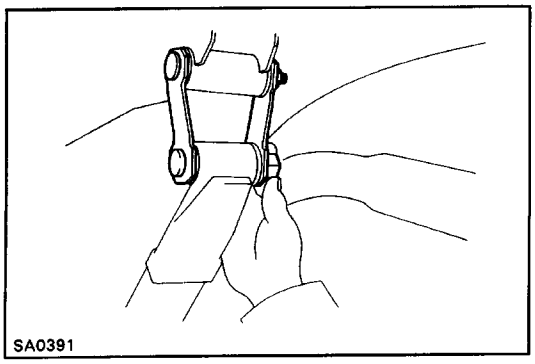

(d) Place the rear end of leaf spring in the rear bracket, and install the shackle pin.

(e) Install the plate and finger tighten the nuts.

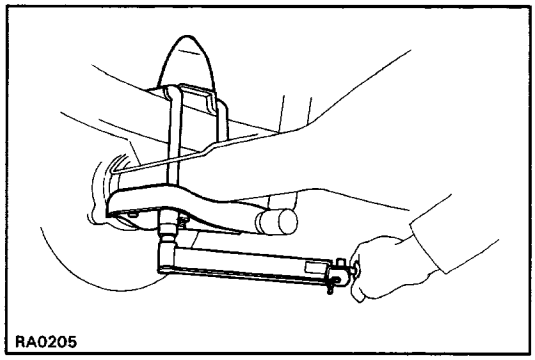

2. INSTALL U–BOLTS

(a) Install the pads and pad retainer on the leaf spring.

(b) (4WD)

Install the spring bumper.

M Install the spring seat, U–bolts, washers and nuts.

(d) Tighten the U–bolt mounting nuts.

Torque:

2W D 0.5 ton	**147 N–m**
	(1,500 kgf–cm, 108 ft–lbf)
1 ton, C&C	**123 N–m**
	(1,250 kgf–cm, 90 ft–lbf)

4WD Xtra cab 123 N–m
(1,250 kgf–cm, 90 ft–lbf)

Regular Cab	**147 N–m**
	(1,500 kgf–cm, 108 ft–lbf)

HINT: Tighten the U–bolts so that the length of all the U–bolts under the spring seat are the same.

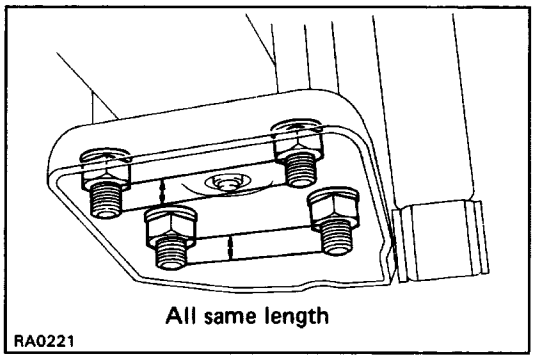

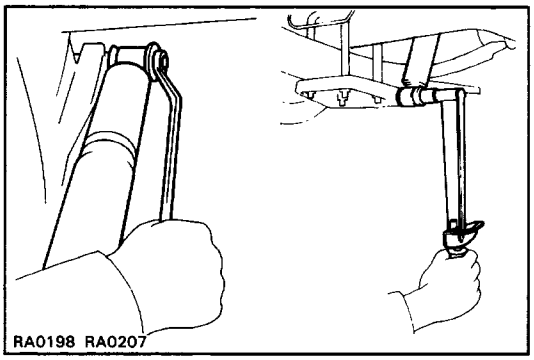

3. INSTALL REAR SHOCK ABSORBER

(a) Connect the shock absorber to the frame with the bolt. Tighten the bolt.

Torque: 2WD 25 N–m (260 kgf–cm, 19 ft–lbf)
4WD 72 N–m (730 kgf–cm, 53 ft–lbf)

(b) Connect the shock absorber to the spring seat with the bolt. Tighten the bolt.

Torque: 2WD 25 N–m (260 kgf–cm, 19 ft–lbf)
4WD 72 N–m (730 kgf–cm, 53 ft–lbf)

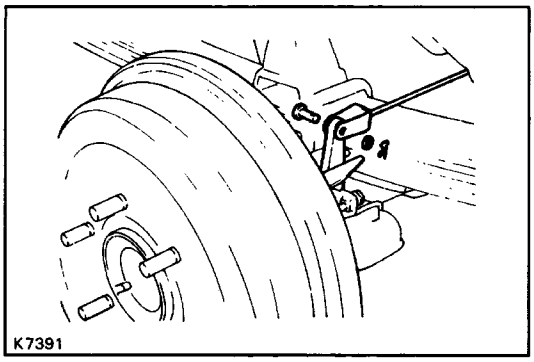

4. (4WD)

CONNECT PARKING BRAKE CABLE

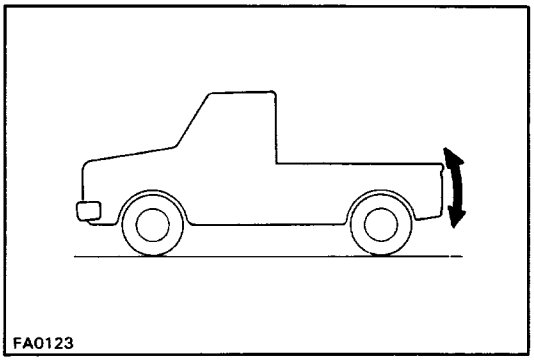

5. STABILIZE SUSPENSION

(a) Install the wheel.

(b) Remove the stands and bounce the vehicle up and down to stabilize the suspension.

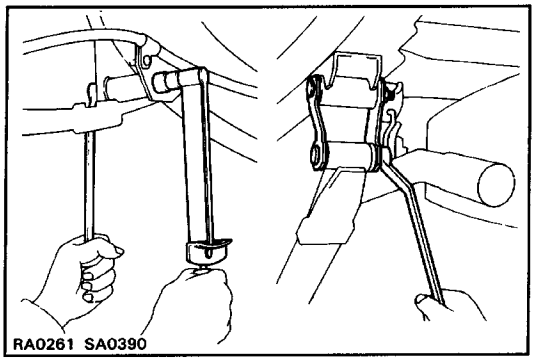

6. TIGHTEN HANGER PIN AND SHACKLE PIN

Tighten the hanger pin nut.

Torque: 0.5 ton

157 N–m (1,600 kgf–cm, 116 ft–lbf)

1 ton and C&C

91 N–m (930 kgf –cm, 67 ft–lbf)

Tighten the shackle nuts.

Torque: 91 N–m (930 kgf–cm, 67 ft–lbf)

Stabilizer Bar

(See page SA–153)

REMOVAL OF STABILIZER BAR

1. JACK UP AND SUPPORT VEHICLE

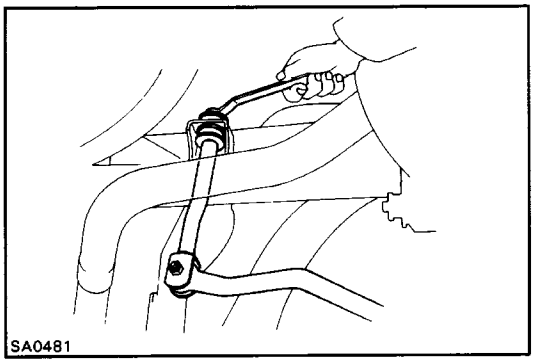

2. DISCONNECT STABILIZER BAR LINK FROM BODY

(a) Disconnect the stabilizer bar link from the body.
(b) Remove the retainers and cushion from the link.

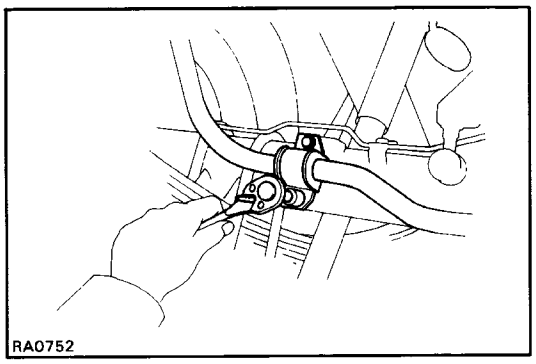

3. REMOVE STABILIZER BAR

(a) Remove the stabilizer bar bracket with cushion from the rear axle housing.
(b) Remove the stabilizer bar.

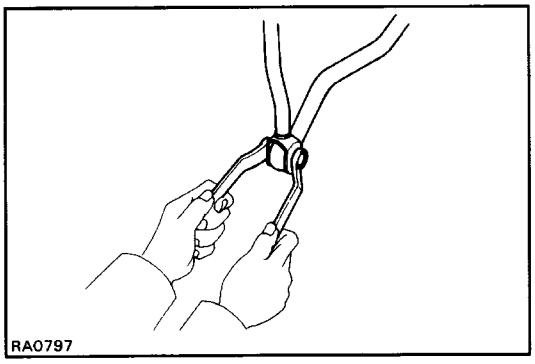

4. REMOVE STABILIZER BAR LINK

(a) Remove the retainers and cushion from the link.
(b) Remove the bolt and nut.
(c) Remove the stabilizer bar link from the stabilizer bar.

INSTALLATION OF STABILIZER BAR

(See page SA–153)

1. INSTALL STABILIZER BAR LINK

(a) Install the retainers and cushion to the link.
(b) Connect the link to the stabilizer bar and torque the bolt and nut.
Torque: 36 N–m (365 kgf–cm, 26 ft–lbf)

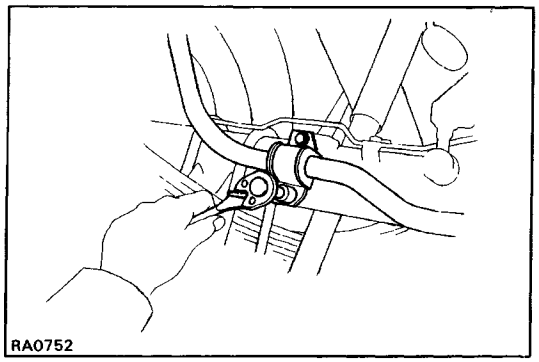

2. INSTALL STABILIZER BAR

(a) Place the stabilizer bar to the rear axle housing.

(b) Install the cushion and bracket.

Torque: 13 N–m (130 kgf–cm, 9 ft–lbf)

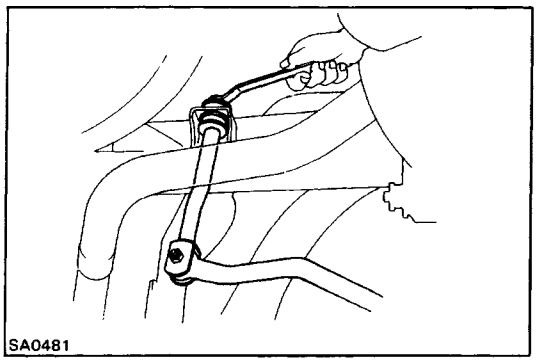

3. CONNECT STABILIZER BAR LINK

(a) Position the link to the body.

(b) Install the retainers and cushion to the link.

(e) Install a new nut.

Torque: 17 N–m (170 kgf–cm, 12 ft–lbf)

4. LOWER VEHICLE